Lane Departure Warning

-The LDW system is developed
(by Iteris and used by Merceds and Freightliner)

-provides warning if the vehicle is about to leave the lane

- consists of camera, computer and lane recognising software to track visible lane markings



Lane Keeping Systems

-LKS automatically controls the steering to keep the vehicle in its lane and follow the lane as it curves around.

-Research in USA universities and some car manufacturers (such as NISSAN) have demonstrated working based on machine vision

- The current systems can operate only on ‘straight-ish’ roads and with limited speed range.



Yaw Stability Control Systems

- The function of yaw control system is to avoid spinning and overturn when the ground friction is not high enough to provide centripetal force.

- Some systems have already applied to commercial vehicles.

Lateral force (centrifugal force) from two wheels

$$\frac{mV^2}{R}$$

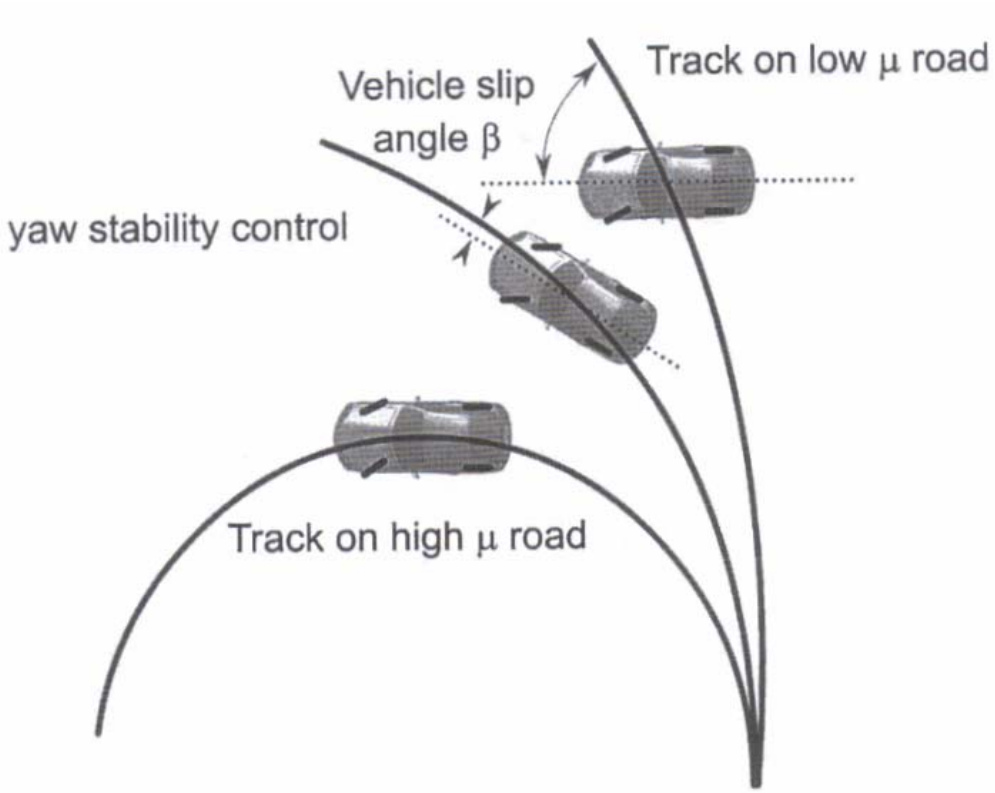

Yaw Stability Control Systems

Yaw control is implemented by

-Differential braking between the left and right wheels.

- Steer-by-wire: system correct the steering.

- Active torque distribution: independent torque is applied to individual wheels.

Consider road bank angle ϕ

$$\text{ma}_y = F_{yf} + F_{yr} + F_{bank}$$

where $F_{bank} = mg \sin \phi$

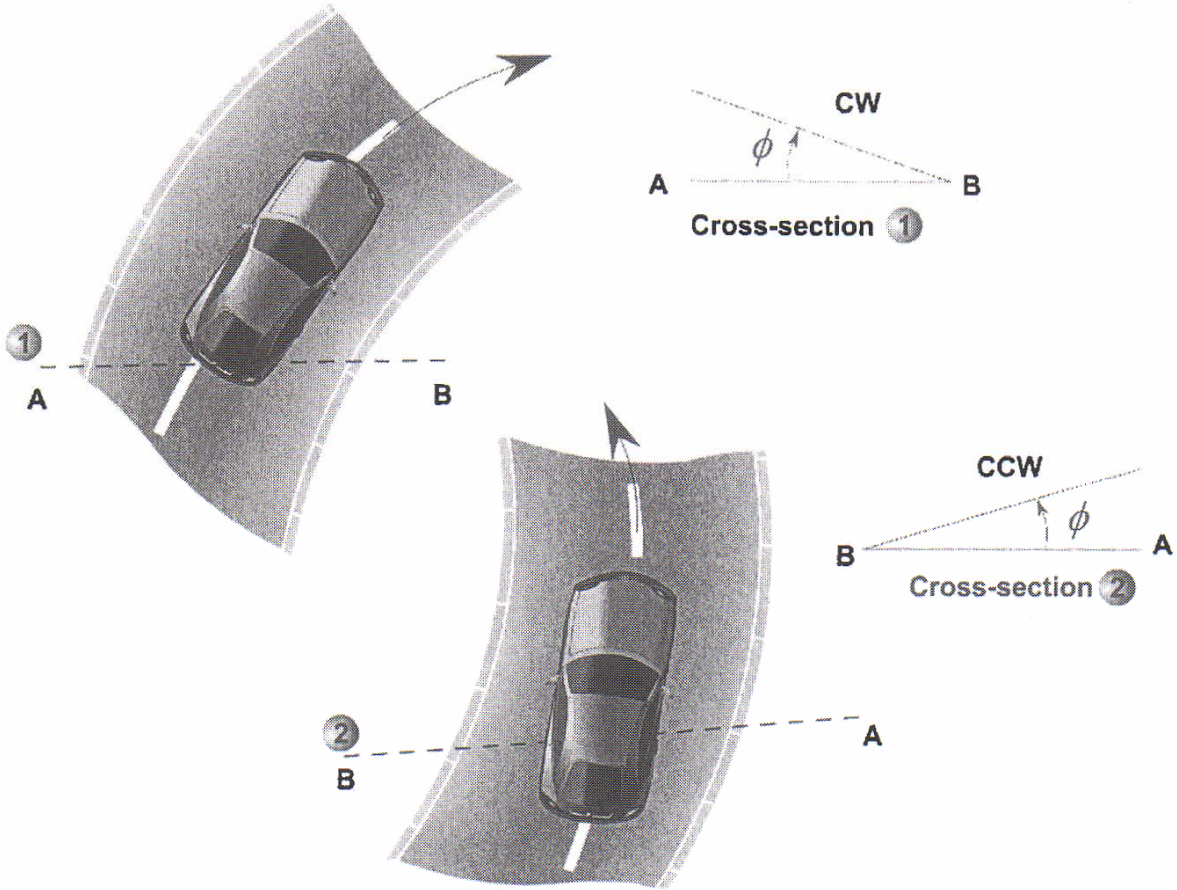

Sign convention for bank angle

Lateral acceleration:

$$a_y = \ddot{y} + V_x \dot{\psi}$$

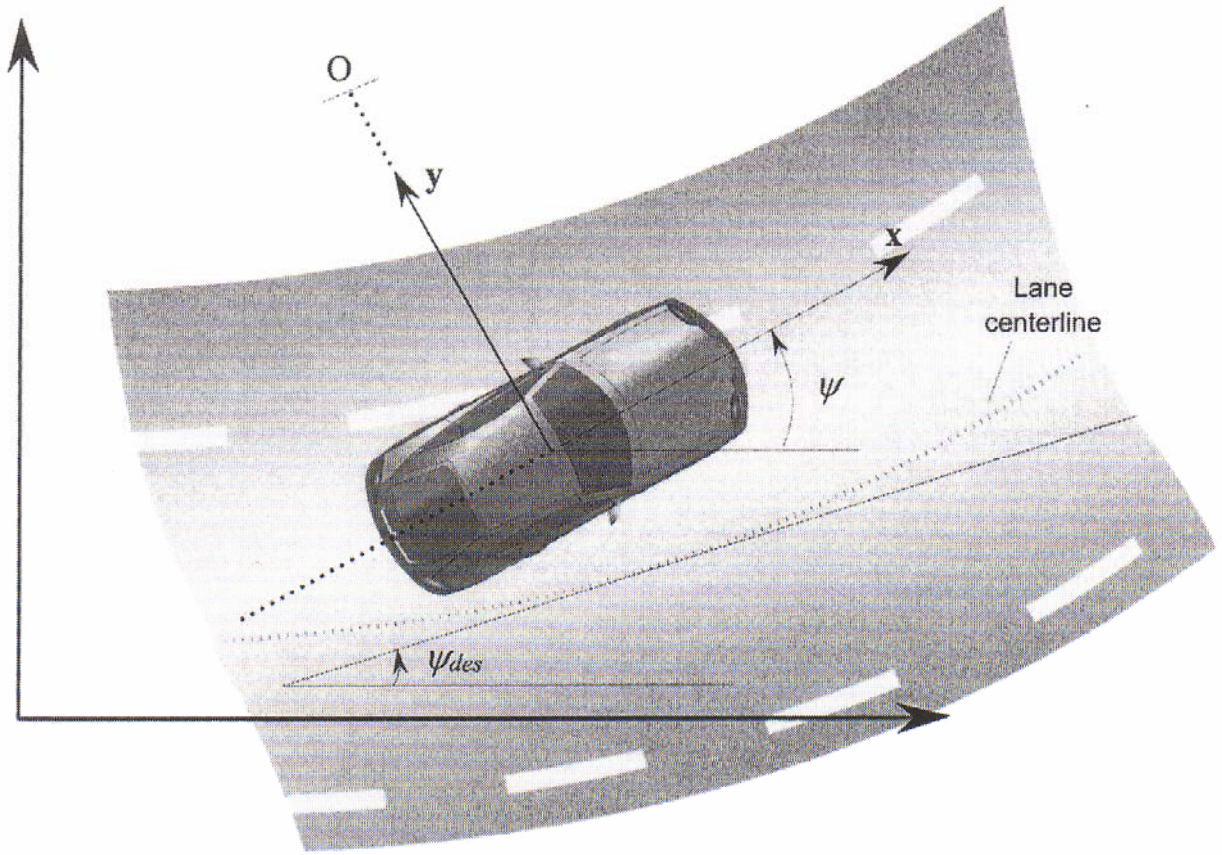

The lateral system in terms of rotating coordinates

Dynamic Model in terms of Error with respect to road

y - Vehicle position (measured from O)

ψ -Yaw

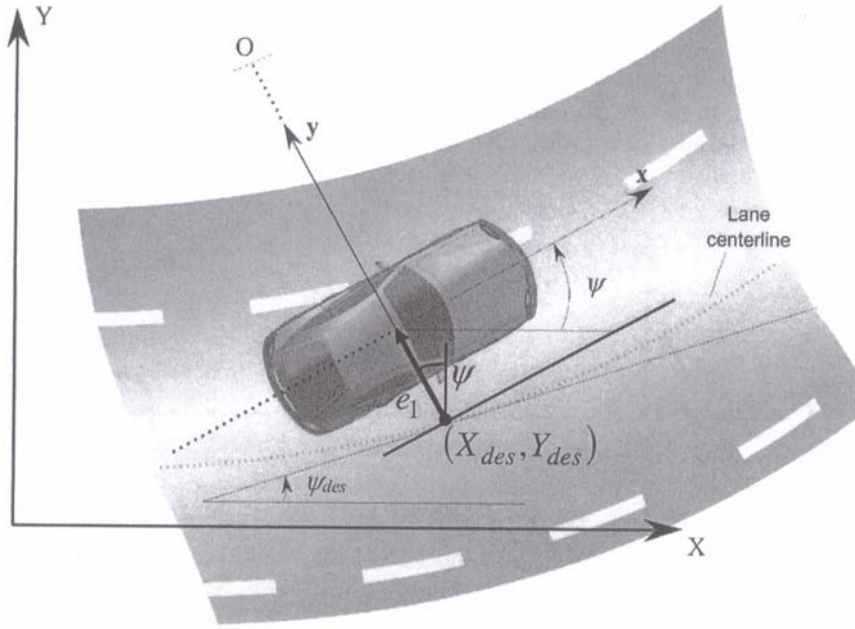

Define

e_1 Distance between c.g. and centre line of road (position error)

$e_2 = \psi - \psi_{des}$ Orientation error:

Desired yaw velocity and yaw acceleration

$$\dot{\psi}_{des} = \frac{V_x}{R}, \qquad \ddot{\psi}_{des} = \frac{V_x^2}{R} = V_x \dot{\psi}_{des}$$

where

V_x – longitudial velocity,

R-road radius

Acceleration:

$$\ddot{e}_1 = a_y - V_x \dot{\psi}_{des} = (\ddot{y} + V_x \dot{\psi}) - V_x \dot{\psi}_{des} = \ddot{y} + V_x (\dot{\psi} - \dot{\psi}_{des})$$

Velocity

$$\dot{e}_1 = \dot{y} + V_x (\psi - \psi_{des})$$

From the lateral equations of motion

$$\frac{d}{dt}\begin{Bmatrix} y \\ \dot{y} \\ \psi \\ \dot{\psi} \end{Bmatrix} = \begin{bmatrix} 0 & 1 & 0 & 0 \\ 0 & -\dfrac{2\left(C_{\alpha f}+C_{\alpha r}\right)}{mV_x} & 0 & -V_x-\dfrac{2\left(C_{\alpha f}l_f-C_{\alpha r}l_r\right)}{mV_x} \\ 0 & 0 & 0 & 1 \\ 0 & -\dfrac{2\left(C_{\alpha f}l_f-C_{\alpha r}l_r\right)}{I_zV_x} & 0 & -\dfrac{2\left(C_{\alpha f}l_f^2+C_{\alpha r}l_r^2\right)}{I_zV_x} \end{bmatrix} \begin{Bmatrix} y \\ \dot{y} \\ \psi \\ \dot{\psi} \end{Bmatrix} + \begin{bmatrix} 0 \\ \dfrac{2C_{\alpha f}}{m} \\ 0 \\ \dfrac{2l_fC_{\alpha f}}{I_z} \end{bmatrix} \delta$$

using

$$\ddot{e}_1 = \ddot{y} + V_x\left(\dot{\psi} - \dot{\psi}_{des}\right)$$
$$\ddot{e}_2 = \ddot{\psi} - \ddot{\psi}_{des}$$

$$\frac{d}{dt}\begin{Bmatrix} e_1 \\ \dot{e}_1 \\ e_2 \\ \dot{e}_2 \end{Bmatrix} = \begin{bmatrix} 0 & 1 & 0 & 0 \\ 0 & -\frac{2\left(C_{\alpha f}+C_{\alpha r}\right)}{mV_x} & \frac{2\left(C_{\alpha f}+C_{\alpha r}\right)}{m} & -\frac{2\left(C_{\alpha f}l_f - C_{\alpha r}l_r\right)}{mV_x} \\ 0 & 0 & 0 & 1 \\ 0 & -\frac{2\left(C_{\alpha f}l_f - C_{\alpha r}l_r\right)}{I_z V_x} & \frac{2\left(C_{\alpha f}l_f - C_{\alpha r}l_r\right)}{I_z} & -\frac{2\left(C_{\alpha f}l_f^2 + C_{\alpha r}l_r^2\right)}{I_z V_x} \end{bmatrix} \begin{Bmatrix} e_1 \\ \dot{e}_1 \\ e_2 \\ \dot{e}_2 \end{Bmatrix}$$

$$+ \begin{bmatrix} 0 \\ \frac{2C_{\alpha f}}{m} \\ 0 \\ \frac{2l_f C_{\alpha f}}{I_z} \end{bmatrix} \delta + \begin{bmatrix} 0 \\ -V_x - \frac{2\left(C_{\alpha f}l_f - C_{\alpha r}l_r\right)}{mV_x} \\ 0 \\ -\frac{2\left(C_{\alpha f}l_f^2 + C_{\alpha r}l_r^2\right)}{I_z V_x} \end{bmatrix} \dot{\psi}_{des}$$

Let

$$e = \begin{Bmatrix} e_1 \\ \dot{e}_1 \\ e_2 \\ \dot{e}_2 \end{Bmatrix}, \ldots$$

$$\dot{e} = Ae + B_1\delta + B_2\dot{\psi}_{des}$$

Open loop

$$\dot{e} = Ae + B_1\delta + B_2\dot{\psi}_{des}$$

Let

$$\zeta = \begin{Bmatrix} \delta \\ \dot{\psi}_{des} \end{Bmatrix}$$

Then

$$\dot{e} = Ae + B_3\zeta$$

where

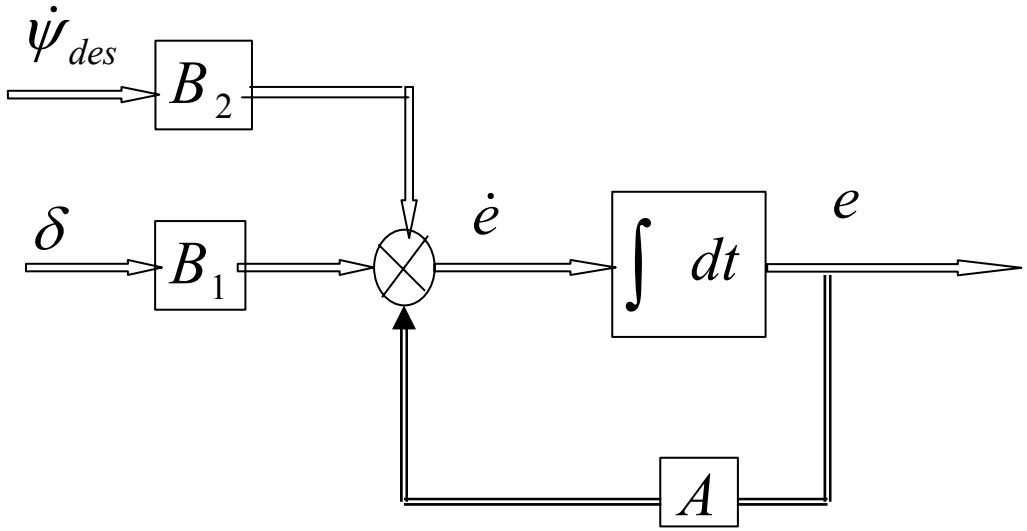

$$A = \begin{bmatrix} 0 & 1 & 0 & 0 \\ 0 & -\dfrac{2\left(C_{\alpha f} + C_{\alpha r}\right)}{mV_x} & \dfrac{2\left(C_{\alpha f} + C_{\alpha r}\right)}{m} & -\dfrac{2\left(C_{\alpha f}l_f - C_{\alpha r}l_r\right)}{mV_x} \\ 0 & 0 & 0 & 1 \\ 0 & -\dfrac{2\left(C_{\alpha f}l_f - C_{\alpha r}l_r\right)}{I_zV_x} & \dfrac{2\left(C_{\alpha f}l_f - C_{\alpha r}l_r\right)}{I_z} & -\dfrac{2\left(C_{\alpha f}l_f^2 + C_{\alpha r}l_r^2\right)}{I_zV_x} \end{bmatrix},$$

$$B_3 = \begin{bmatrix} 0 & 0 \\ \dfrac{2C_{\alpha f}}{m} & -V_x - \dfrac{2\left(C_{\alpha f}l_f - C_{\alpha r}l_r\right)}{mV_x} \\ 0 & 0 \\ \dfrac{2l_fC_{\alpha f}}{I_z} & -\dfrac{2\left(C_{\alpha f}l_f^2 + C_{\alpha r}l_r^2\right)}{I_zV_x} \end{bmatrix}$$

Write in control form

$$\dot{e} = Ae + B_3\zeta$$

$$z = Ce + D\zeta$$

where

$$C = \begin{bmatrix} 1 & 0 & 0 & 0 \\ 0 & 1 & 0 & 0 \\ 0 & 0 & 1 & 0 \\ 0 & 0 & 0 & 1 \end{bmatrix}, \qquad D = \begin{bmatrix} 0 & 0 \\ 0 & 0 \\ 0 & 0 \\ 0 & 0 \end{bmatrix}$$

$$\dot{\psi}_{des} = 0.03 rad/s (speed = 30 m/s, \text{circular bend R} = 1000\text{m})$$

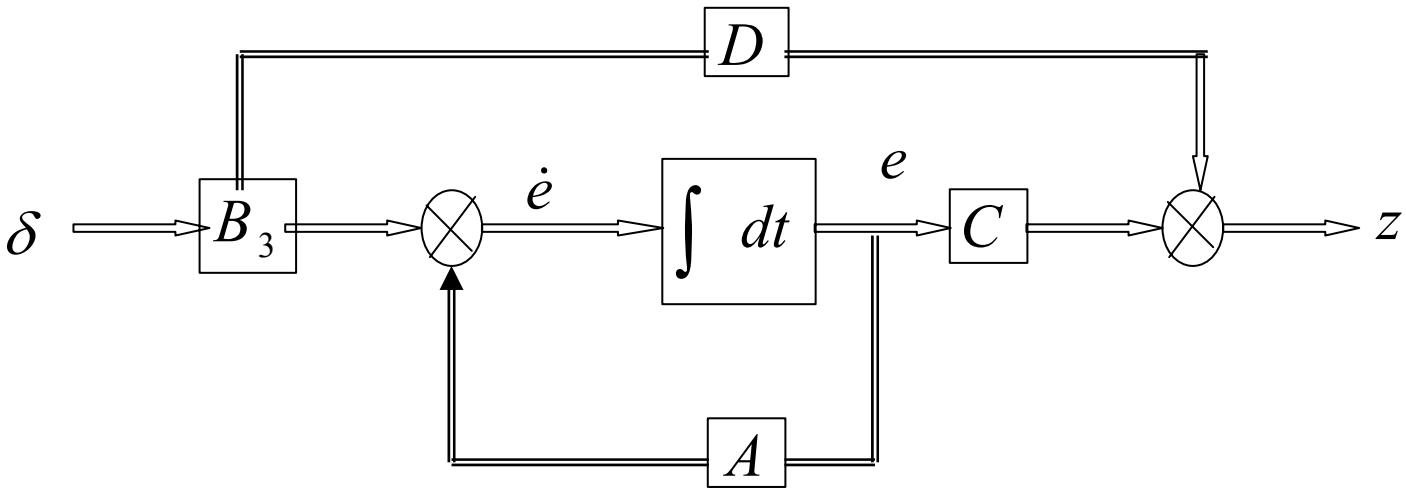

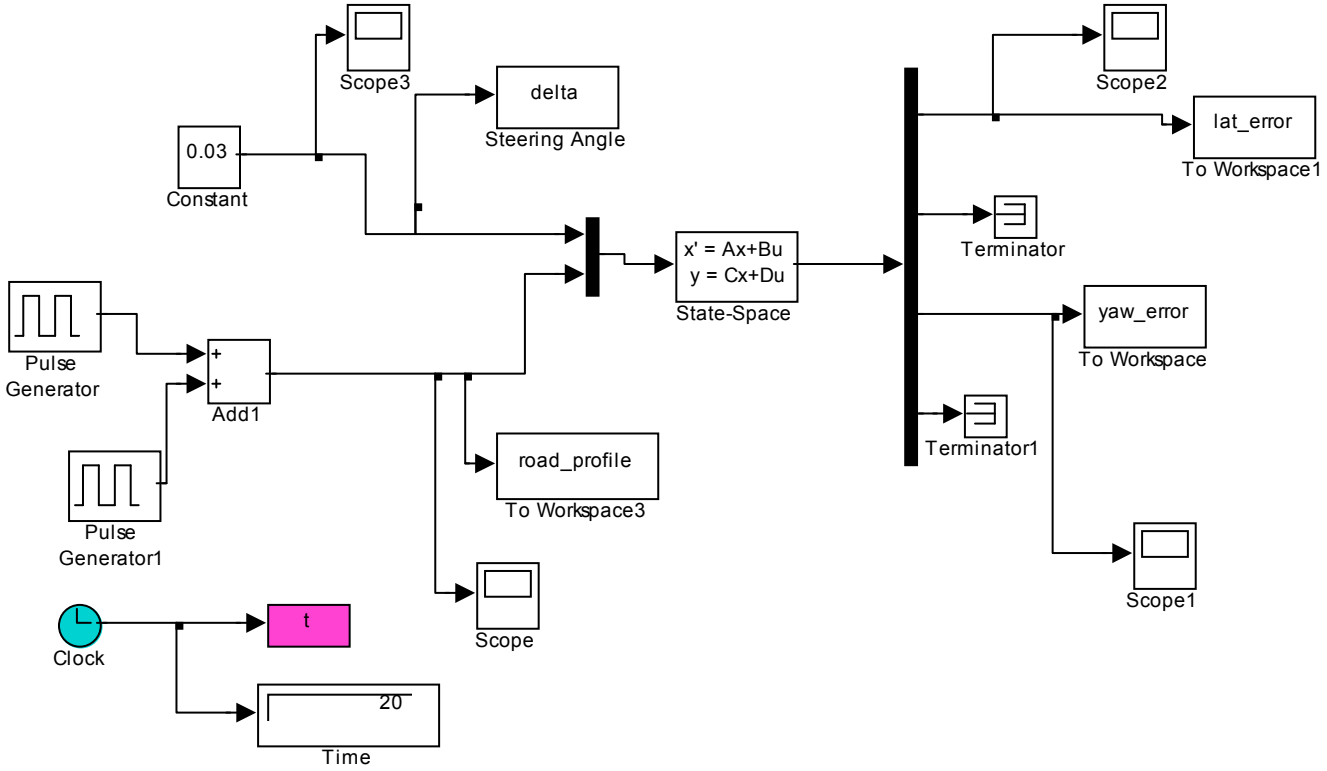
Scope3
delta
Steering Angle
0.03
Constant
Scope2
lat_error
To Workspace1
Terminator
x' = Ax+Bu
y = Cx+Du
State-Space
Pulse
Generator
Add1
yaw_error
To Workspace
Terminator1
road_profile
To Workspace3
Pulse
Generator1
Scope1
Scope
Clock
t
20
Time

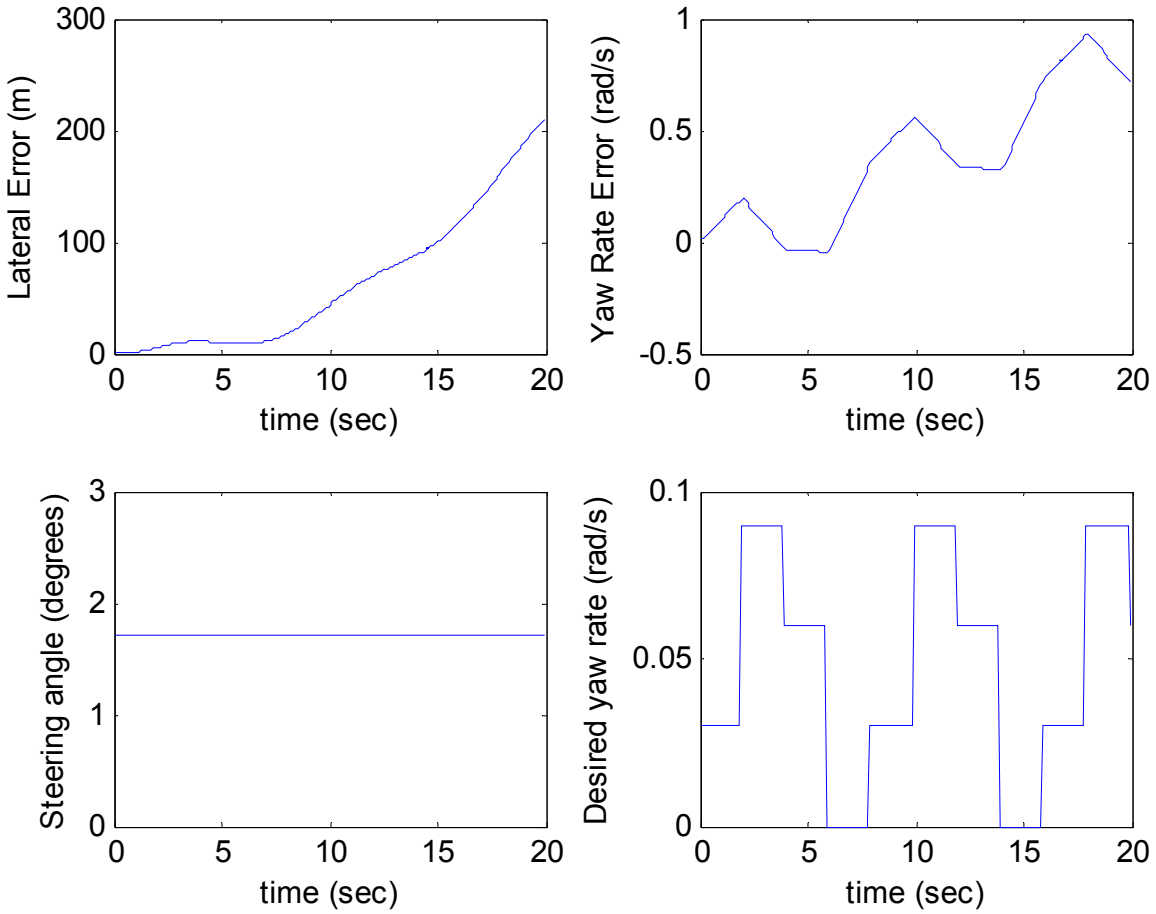
Lateral Error (m)
300
200
100
0
0
5
10
15
20
time (sec)
Yaw Rate Error (rad/s)
1
0.5
0
-0.5
0
5
10
15
20
time (sec)
Steering angle (degrees)
3
2
1
0
0
5
10
15
20
time (sec)
Desired yaw rate (rad/s)
0.1
0.05
0
0
5
10
15
20
time (sec)

Steering Control for automated Lane Keeping

Closed loop (with feedback)

$$\dot{e} = Ae + B_1\delta + B_2\dot{\psi}_{des}$$

Apply state feedback $\delta = -Ke$

where $K = \begin{bmatrix} k_1 & k_2 & k_3 & k_4 \end{bmatrix}$

then

$$\dot{e} = (A - B_1K)e + B_2\dot{\psi}_{des}$$

K can be found using Matlab function

$\mathrm{K} = \mathrm{place}(\mathrm{A}, \mathrm{B}_1, p)$

where eigenvalues are given as

$$p = \begin{bmatrix} -5-3j & -5+3j & -7 & 10 \end{bmatrix}^T$$

It can be found

K= [0.5764 0.0807 3.2974 0.2291]

Steering Control for automated Lane Keeping

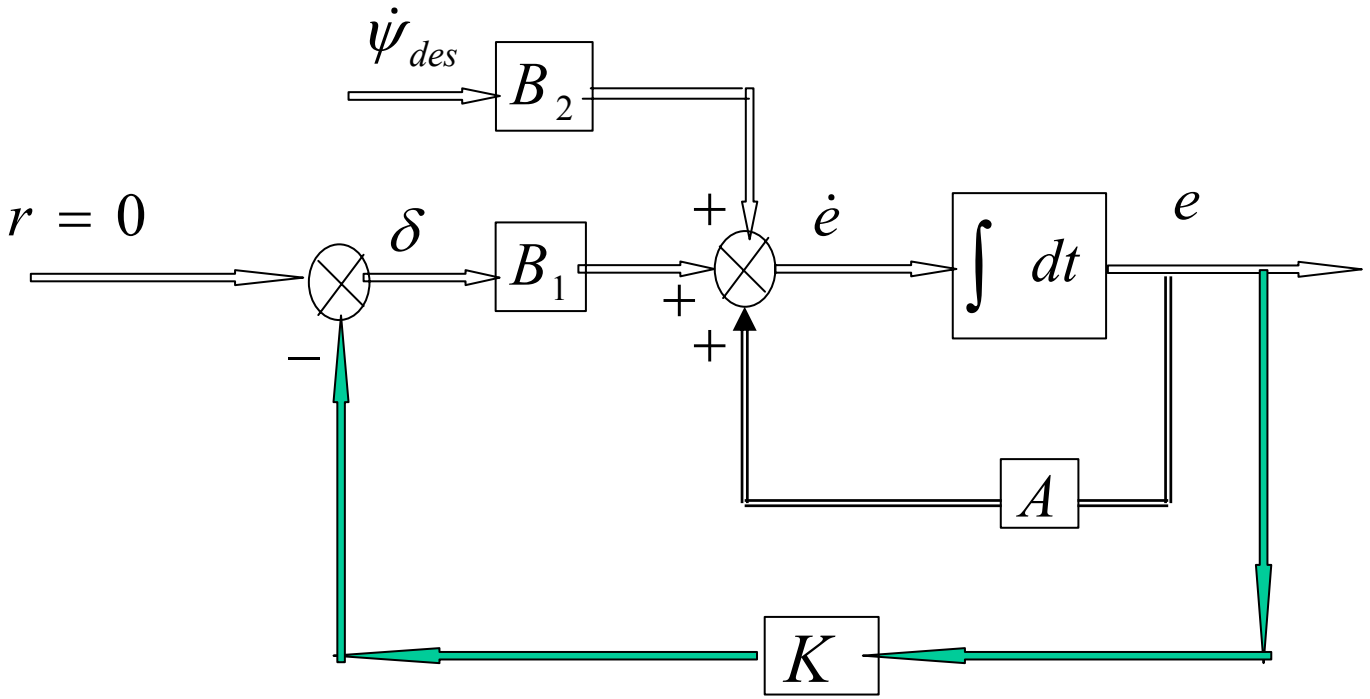

Closed loop control for automated lane keeping

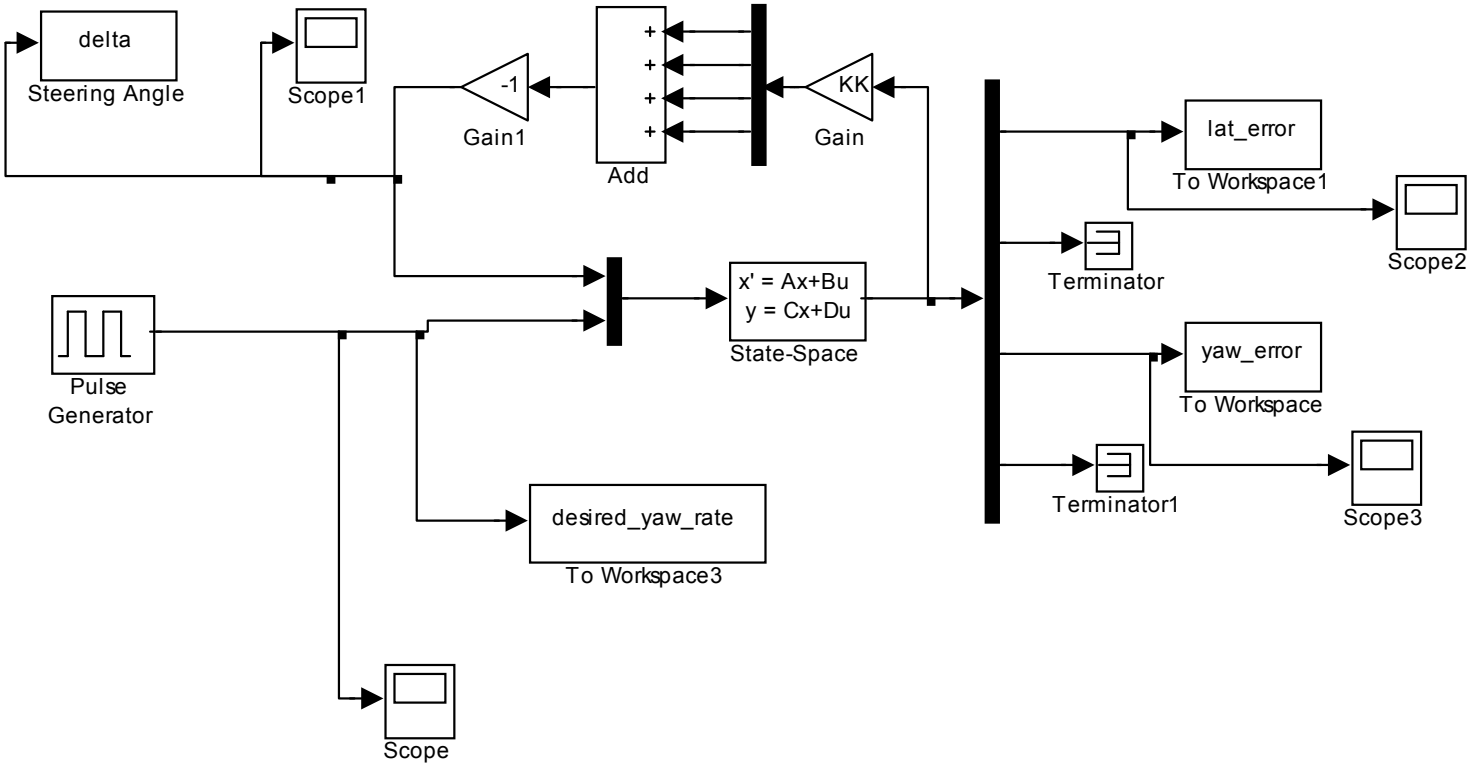

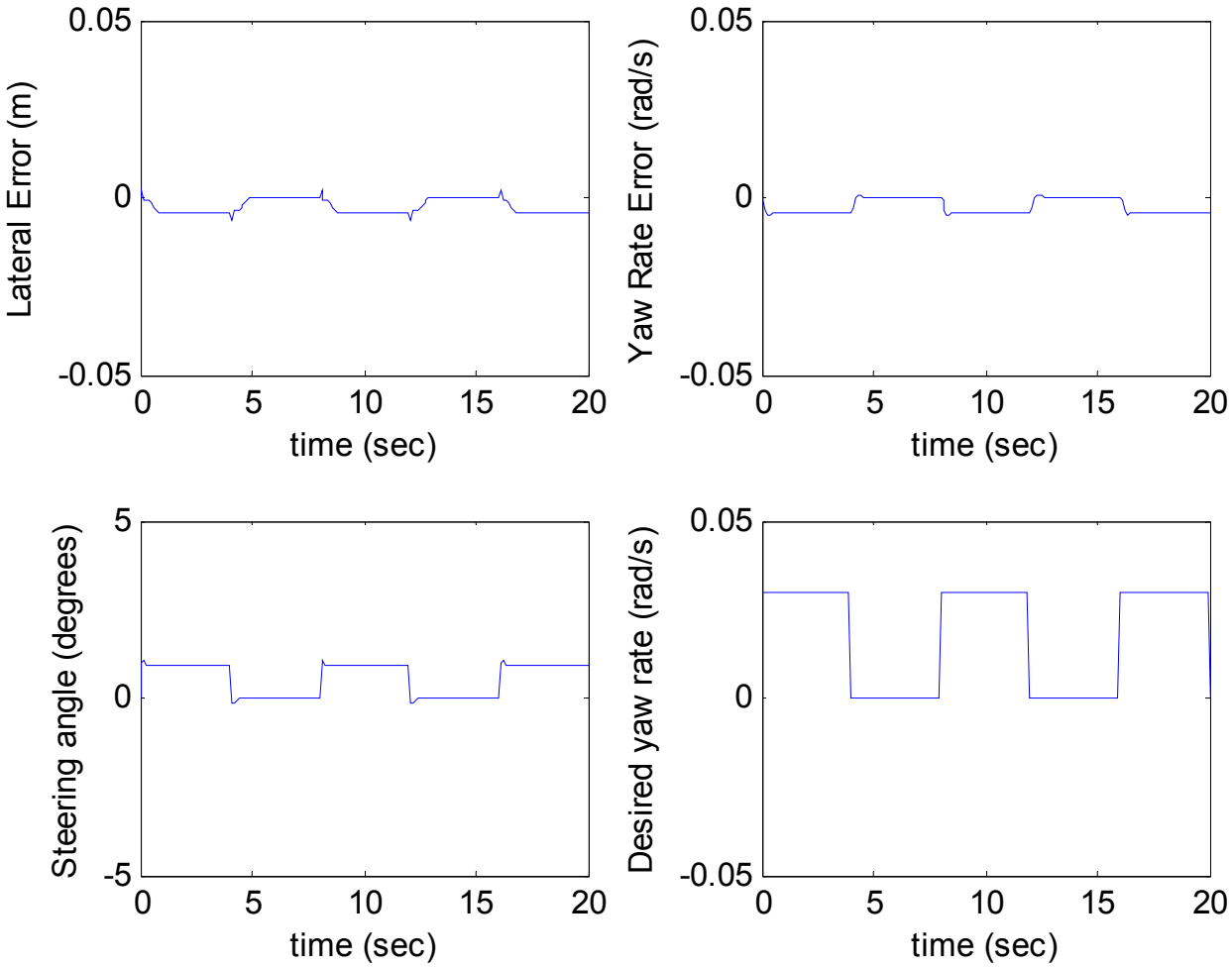
Lateral Error (m)
0.05
0
-0.05
0
5
10
15
20
time (sec)
Yaw Rate Error (rad/s)
0.05
0
-0.05
0
5
10
15
20
time (sec)
Steering angle (degrees)
5
0
-5
0
5
10
15
20
time (sec)
Desired yaw rate (rad/s)
0.05
0
-0.05
0
5
10
15
20
time (sec)

Dynamic Model in terms of Error with respect to road + road bank

e_1 – distance between c.g. and centre line of road

e_2 – orientation error

$$\frac{d}{dt}\begin{Bmatrix} e_1 \\ \dot{e}_1 \\ e_2 \\ \dot{e}_2 \end{Bmatrix} = \begin{bmatrix} 0 & 1 & 0 & 0 \\ 0 & -\frac{2\left(C_{\alpha f}+C_{\alpha r}\right)}{mV_x} & \frac{2\left(C_{\alpha f}+C_{\alpha r}\right)}{m} & -\frac{2\left(C_{\alpha f}l_f - C_{\alpha r}l_r\right)}{mV_x} \\ 0 & 0 & 0 & 1 \\ 0 & -\frac{2\left(C_{\alpha f}l_f - C_{\alpha r}l_r\right)}{I_z V_x} & \frac{2\left(C_{\alpha f}l_f - C_{\alpha r}l_r\right)}{I_z} & -\frac{2\left(C_{\alpha f}l_f^2 + C_{\alpha r}l_r^2\right)}{I_z V_x} \end{bmatrix} \begin{Bmatrix} e_1 \\ \dot{e}_1 \\ e_2 \\ \dot{e}_2 \end{Bmatrix}$$

$$+ \begin{bmatrix} 0 \\ \frac{2C_{\alpha f}}{m} \\ 0 \\ \frac{2l_f C_{\alpha f}}{I_z} \end{bmatrix} \delta + \begin{bmatrix} 0 \\ -V_x - \frac{2\left(C_{\alpha f}l_f - C_{\alpha r}l_r\right)}{mV_x} \\ 0 \\ -\frac{2\left(C_{\alpha f}l_f^2 + C_{\alpha r}l_r^2\right)}{I_z V_x} \end{bmatrix} \dot{\psi}_{des} + \begin{bmatrix} 0 \\ g \\ 0 \\ 0 \end{bmatrix} \sin\phi$$

or

$$\dot{e} = Ae + B_1\delta + B_2\dot{\psi}_{des} + B_4 \sin\phi$$

The open - loop state - state equation

$$\dot{e} = Ae + B_1\delta + B_5\xi$$

where

$$B_5 = \left[B_2 \middle| B_4\right]$$

$$\xi = \begin{bmatrix} \dot{\psi}_{des} \\ \sin\phi \end{bmatrix}$$

Apply state feedback $\delta = -Ke$

where $K = \begin{bmatrix} k_1 & k_2 & k_3 & k_4 \end{bmatrix}$

then

$$\dot{e} = \left(A - B_1K\right)e + B_5\xi$$