System in State Space: Simulation

Basic example

$$m\ddot{x} + c\dot{x} + kx = u(t)$$

Laplace Transform

$$(ms^2 + cs + k)X(s) = U(s)$$

$$X(s) = \frac{1}{ms^2 + cs + k}U(s)$$

$$Let\ m = 1,\ c = 5, k = 50$$

$$X(s) = \frac{1}{s^2 + 5s + 50}U(s)$$

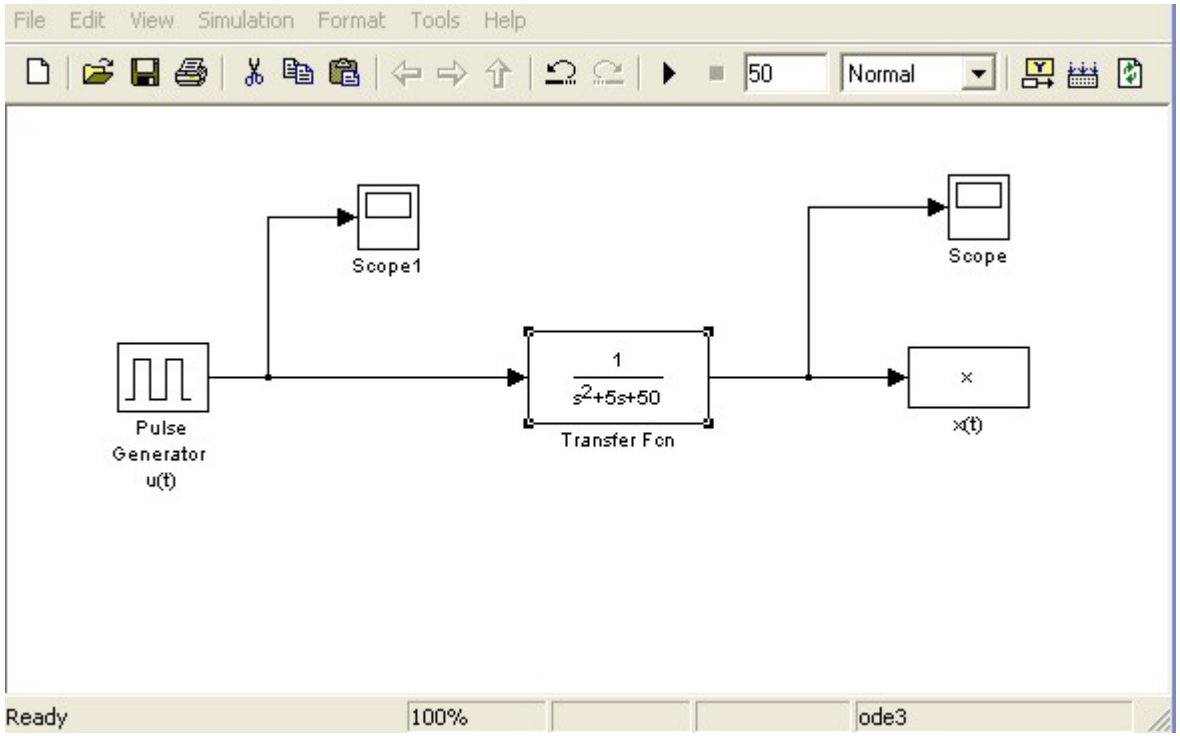

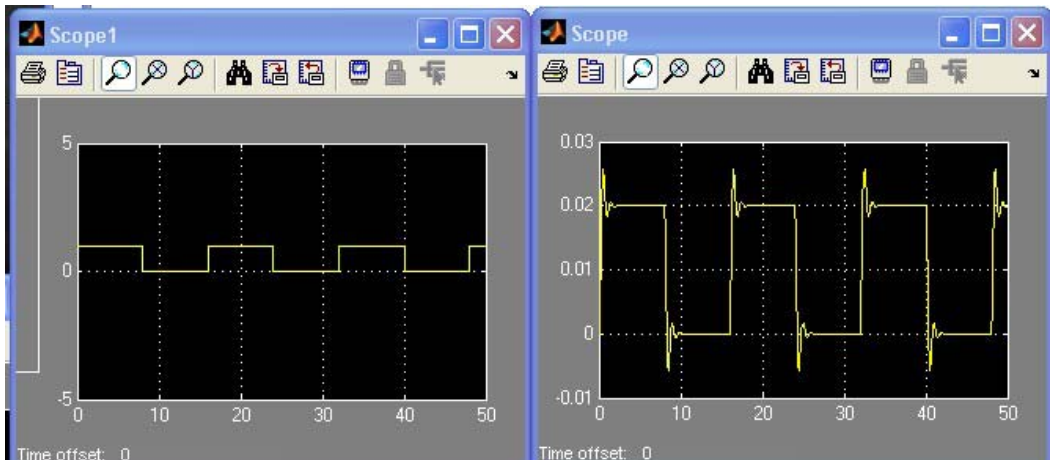

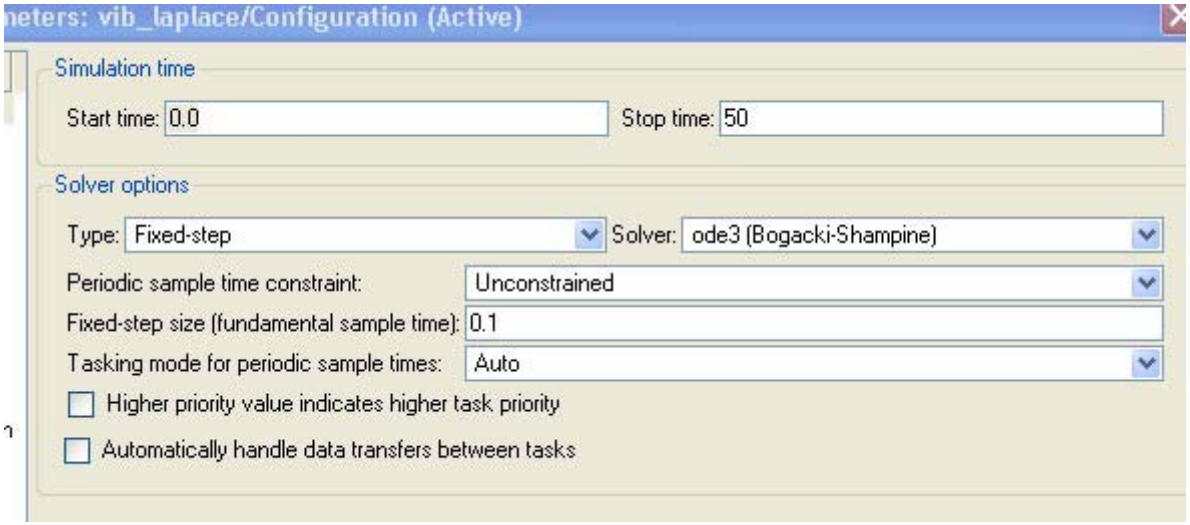
neters: vib_laplace/Configuration (Active)
Simulation time
Start time: 0.0
Stop time: 50
Solver options
Type: Fixed-step
Solver: ode3 (Bogacki-Shampine)
Periodic sample time constraint:
Unconstrained
Fixed-step size (fundamental sample time): 0.1
Tasking mode for periodic sample times:
Auto
Higher priority value indicates higher task priority
Automatically handle data transfers between tasks

System in State Space: Simulation

Let

$$x_1 = x$$

$$x_2 = \dot{x}_1$$

$$\dot{x}_2 = -\frac{c}{m}x_2 - \frac{k}{m}x_1 = \frac{u(t)}{m}$$

or

$$\begin{Bmatrix} \dot{x}_1 \\ \dot{x}_2 \end{Bmatrix} = \begin{bmatrix} 0 & 1 \\ -k/m & -c/m \end{bmatrix} \begin{Bmatrix} x_1 \\ x_2 \end{Bmatrix} + \begin{bmatrix} 0 \\ 1/m \end{bmatrix} u(t)$$

$$y = \begin{bmatrix} 1 & 0 \end{bmatrix} \begin{Bmatrix} x_1 \\ x_2 \end{Bmatrix} + [0]u(t)$$

i.e.

$$A = \begin{bmatrix} 0 & 1 \\ -k/m & -c/m \end{bmatrix}, B = \begin{bmatrix} 0 \\ 1/m \end{bmatrix},$$

$$C = \begin{bmatrix} 1 & 0 \end{bmatrix}, D = [0]$$

Let

$$m = 1, c = 5, k = 50.$$

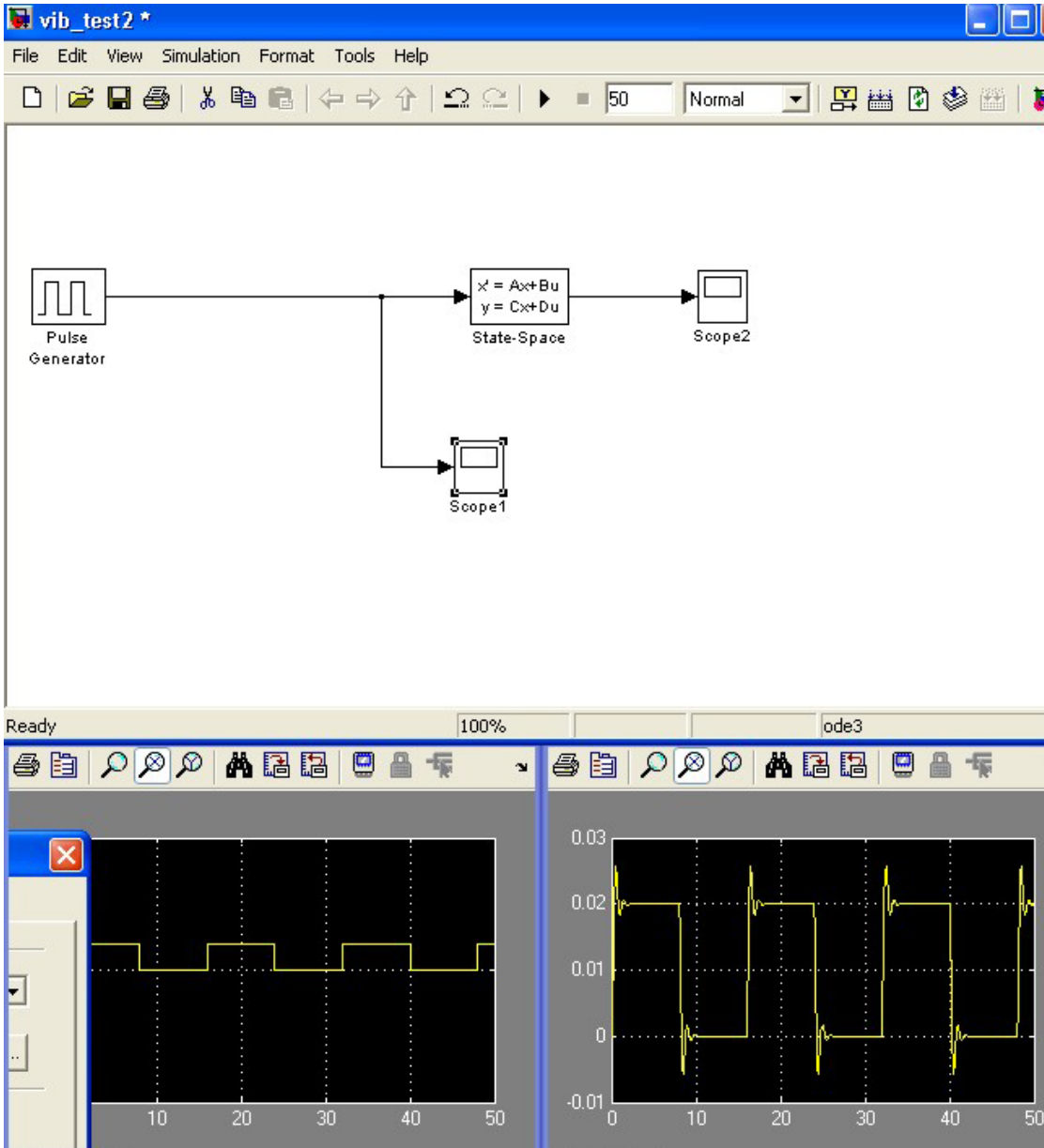

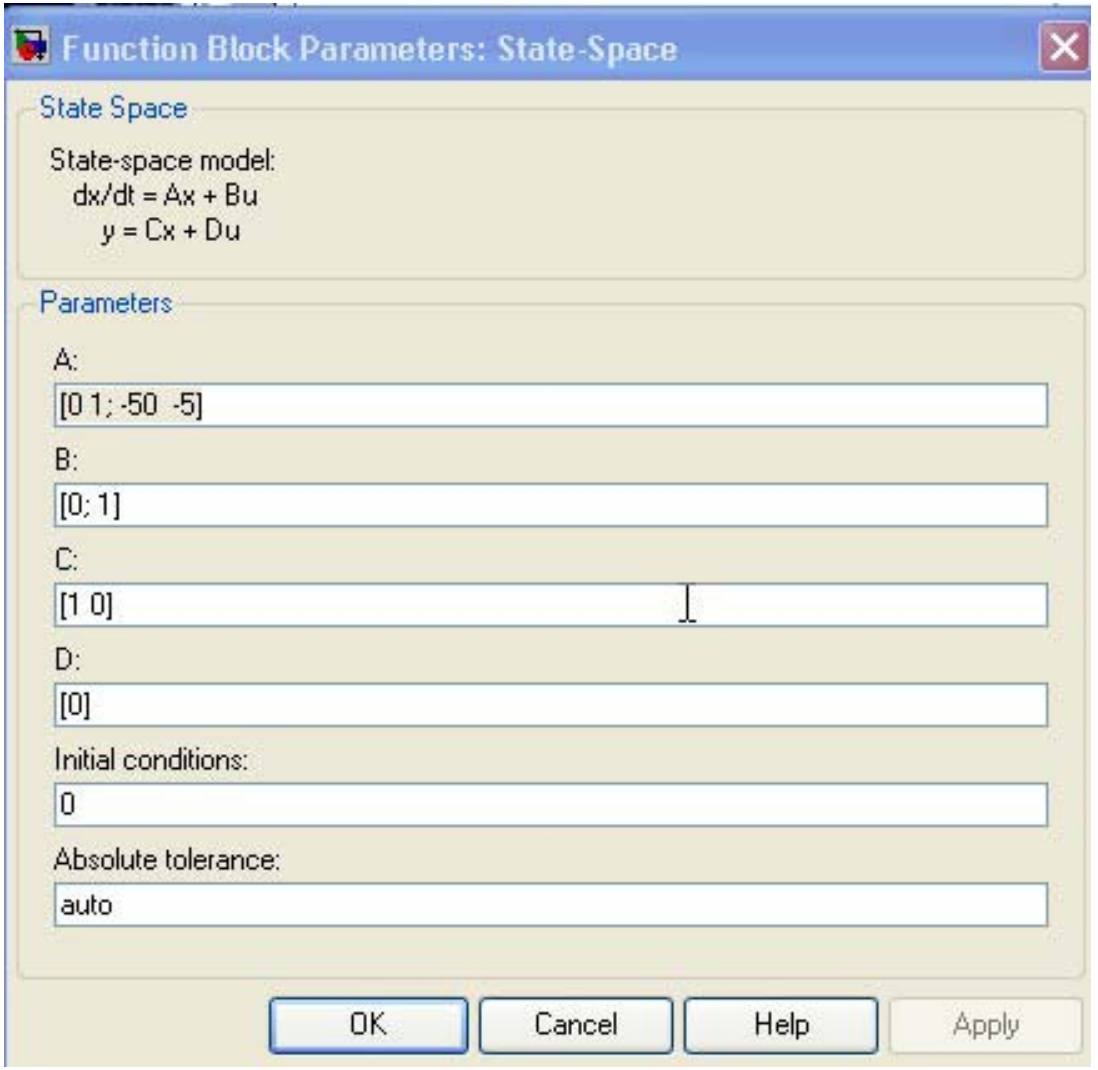
Function Block Parameters: State-Space
State Space
State-space model:
dx/dt = Ax + Bu
y = Cx + Du
Parameters
A:
[0 1; -50 -5]
B:
[0; 1]
C:
[1 0]
D:
[0]
Initial conditions:
0
Absolute tolerance:
auto
OK
Cancel
Help
Apply

System in State Space and Control (open loop)

$$\dot{x} = Ax + Bu$$
$$y = Cx + Du$$

$$\dot{x}_{n\times 1} = A_{n\times n}x_{n\times 1} + B_{n\times r}u_{r\times 1}$$
$$y_{m\times 1} = C_{m\times n}x_{n\times 1} + D_{m\times r}u_{r\times 1}$$

State x is controllable by input u if the following matrix has order n :

$$\left[B\middle|AB\middle|A^2B\middle|\ldots\middle|A^{n-1}B\right]_{n\times n}$$

Output y is controllable by input u if the following matrix has order m :

$$\left[CB\middle|CAB\middle|CA^2B\middle|\ldots CA^{n-1}B\middle|D\right]_{m\times(n+1)r}$$

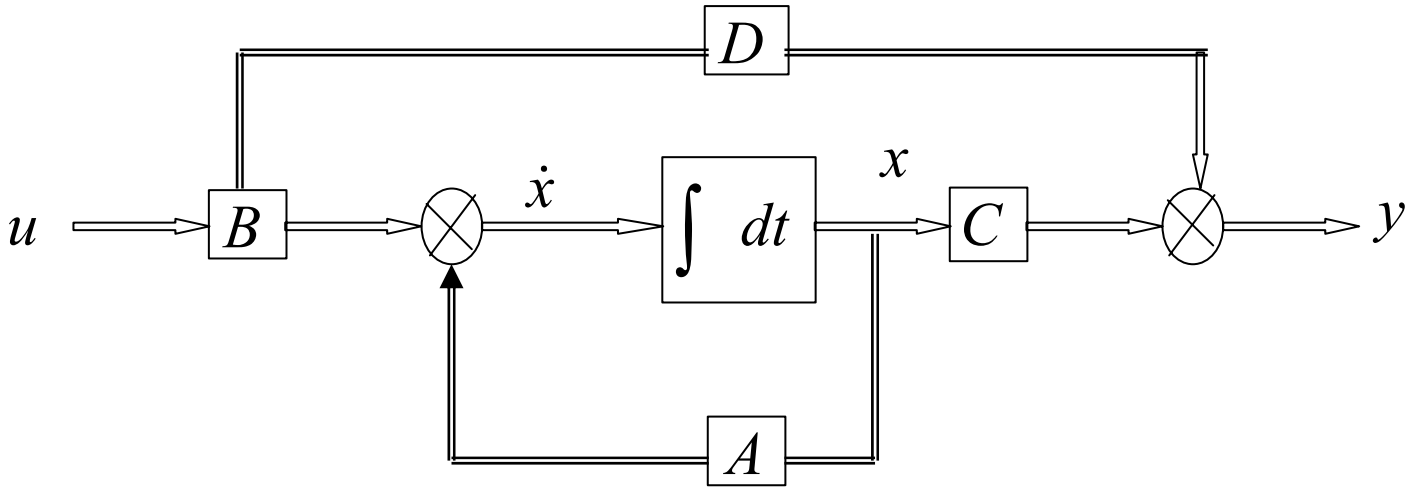

System in State Space and Control (open loop)

Examples:

System

$$\begin{Bmatrix} \dot{x}_1 \\ \dot{x}_2 \end{Bmatrix} = \begin{bmatrix} 1 & 1 \\ 0 & -1 \end{bmatrix} \begin{Bmatrix} x_1 \\ x_2 \end{Bmatrix} + \begin{bmatrix} 1 \\ 0 \end{bmatrix} u$$

$$\left[B \middle| AB\right] = \left[\begin{bmatrix} 1 \\ 0 \end{bmatrix}, \begin{bmatrix} 1 & 1 \\ 0 & -1 \end{bmatrix} \begin{bmatrix} 1 \\ 0 \end{bmatrix} \right] = \begin{bmatrix} 1 & 1 \\ 0 & 0 \end{bmatrix}$$

The order is 1. The state of the system is not controllable.

System

$$\begin{Bmatrix} \dot{x}_1 \\ \dot{x}_2 \end{Bmatrix} = \begin{bmatrix} 1 & 1 \\ 2 & -1 \end{bmatrix} \begin{Bmatrix} x_1 \\ x_2 \end{Bmatrix} + \begin{bmatrix} 0 \\ 1 \end{bmatrix} u$$

$$\left[B \middle| AB\right] = \left[\begin{bmatrix} 0 \\ 1 \end{bmatrix}, \begin{bmatrix} 1 & 1 \\ 2 & -1 \end{bmatrix} \begin{bmatrix} 0 \\ 1 \end{bmatrix} \right] = \begin{bmatrix} 0 & 1 \\ 1 & -1 \end{bmatrix}$$

The order is 2. The state of the system is controllable.

System in State Space and Control with feedback

$$\dot{x} = Ax + Bu$$
$$y = Cx$$
$$u = -Gx + r$$

$$\dot{x}_{n\times 1} = A_{n\times n}x_{n\times 1} + B_{n\times 1}u_{1\times 1}$$
$$y_{m\times 1} = C_{m\times n}x_{n\times 1}$$
$$u_{1\times 1} = -Gx_{n\times 1} + r_{1\times 1}$$

State x is controllable by input u if a G can be found to make the eigen values of $A - BG$ arbitrary

i.e. roots of eigen equation

$$\left|\lambda I - (A - BG)\right| = 0$$

are arbitrary.

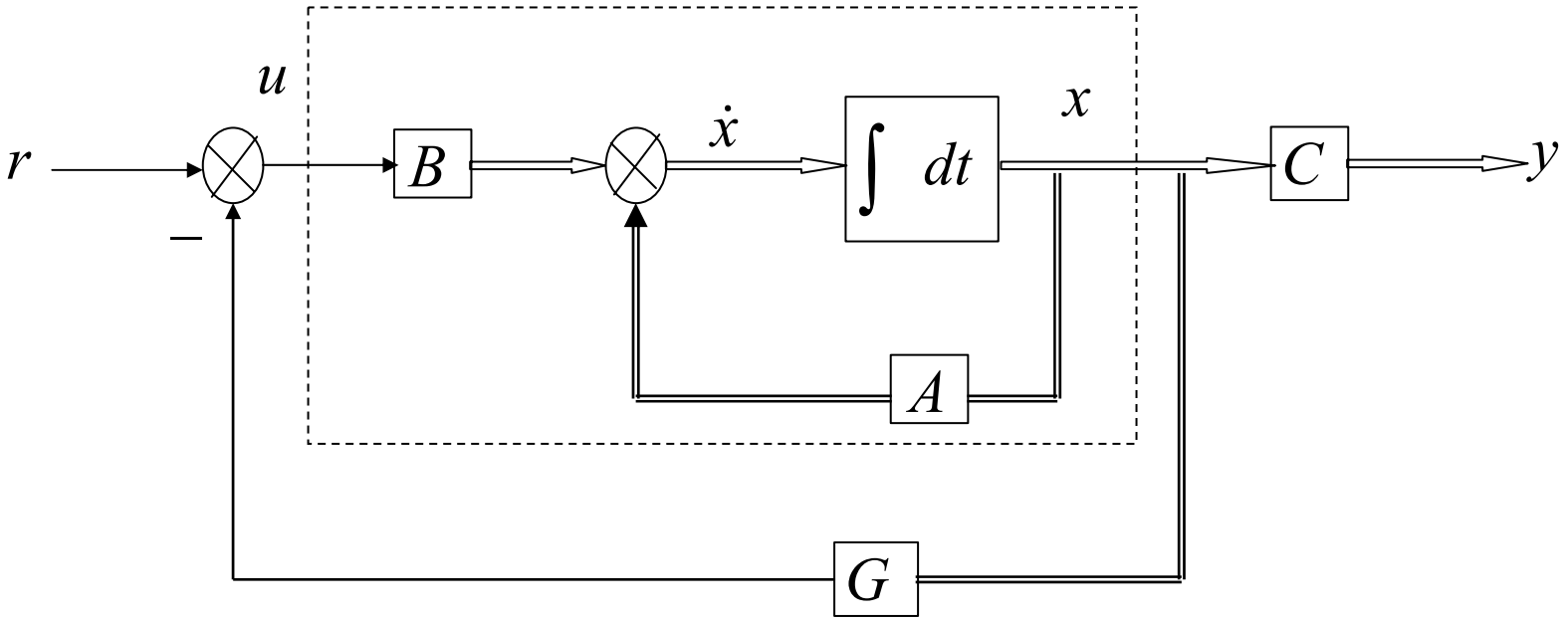

System in State Space and Control with feedback

For system $\begin{Bmatrix}\dot{x}_1\\ \dot{x}_2\\ \dot{x}_3\end{Bmatrix}=\begin{bmatrix}0 & 1 & 0\\ 0 & 0 & 1\\ 0 & -2 & -3\end{bmatrix}\begin{Bmatrix}x_1\\ x_2\\ x_3\end{Bmatrix}+\begin{bmatrix}0\\ 0\\ 1\end{bmatrix}u, \qquad y=\begin{bmatrix}10 & 0 & 0\end{bmatrix}\begin{Bmatrix}x_1\\ x_2\\ x_3\end{Bmatrix}$

require the corresponding closed circiut eigen values

-2, -1+ j,-1-j,

Find the feedback $G=[g_1 \quad g_2 \quad g_3]$

Solution : With requireed eigen values, the equation :

$(\lambda+2)(\lambda+1+j)(\lambda+1-j)=\lambda^3+4\lambda^2+6\lambda+4=0$

The closed circiut characteristic equation :

$$\left|\lambda I-(A-BG)\right|=\left|\begin{bmatrix}\lambda & & \\ & \lambda & \\ & & \lambda\end{bmatrix}-\begin{bmatrix}0 & 1 & 0\\ 0 & 0 & 1\\ 0 & -2 & -3\end{bmatrix}-\begin{bmatrix}0\\ 0\\ 1\end{bmatrix}[g_1 \quad g_2 \quad g_3]\right|=0$$

$$i.e.\left|\begin{bmatrix}\lambda & & \\ & \lambda & \\ & & \lambda\end{bmatrix}-\begin{bmatrix}0 & 1 & 0\\ 0 & 0 & 1\\ 0 & -2 & -3\end{bmatrix}-\begin{bmatrix}0 & 0 & 0\\ 0 & 0 & 0\\ g_1 & g_2 & g_3\end{bmatrix}\right|=\begin{vmatrix}\lambda & -1 & 0\\ 0 & \lambda & -1\\ g_1 & 2+g_2 & \lambda+3+g_3\end{vmatrix}=0$$

$\lambda^3+(3+g_3)\lambda^2+(2+g_2)\lambda+g_1=0$

Compare the coefficients, therefore $g_1=4, g_2=4, g_3=1$ *i.e.* $G=[4 \quad 4 \quad 1]$.