Methods and Tools

Average Operating Point Approach

To lump all engine operating points into one single average operating point.

Used to estimate the fuel consumption

Test cycle needs to be specified when doing estimation.

Vehicle components:

- Fuel tank
- Engine
- Auxiliaries & cutch
- Gearbox
- Wheel(vehicle)

Fuel power

$\overline{P}_f = \overline{m}_f H_l$

where $\overline{m}_f$ – fuel mass flow, H_l – fuel's heating value (e.g.10KWh/L for diesel)

Vehicle Power

$\overline{P}_v = \eta_g \eta_a \eta_e \overline{P}_f$

i.e.

$\overline{P}_v = \eta_g \eta_a \eta_e \overline{m}_f H_l$

where efficiencies

η_g – gear box,

η_a - auxiliaries and cluch,

η_e – engine

Fuel mass flow

$$\overline{m}_f = \frac{\overline{P}_v}{\eta_g \eta_a \eta_e H_l}$$

This approach is to calculate an estimate of fuel consumption.

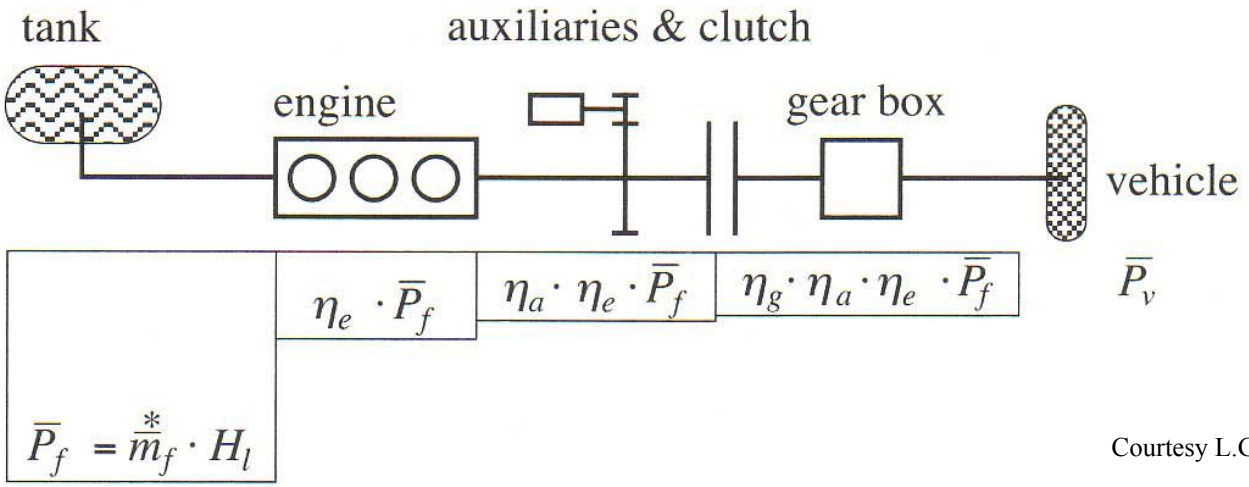

Courtesy L.Guzzella

Illustration of the components considered in the fixed operating point approach for the case of a conventional IC engine powertrain.

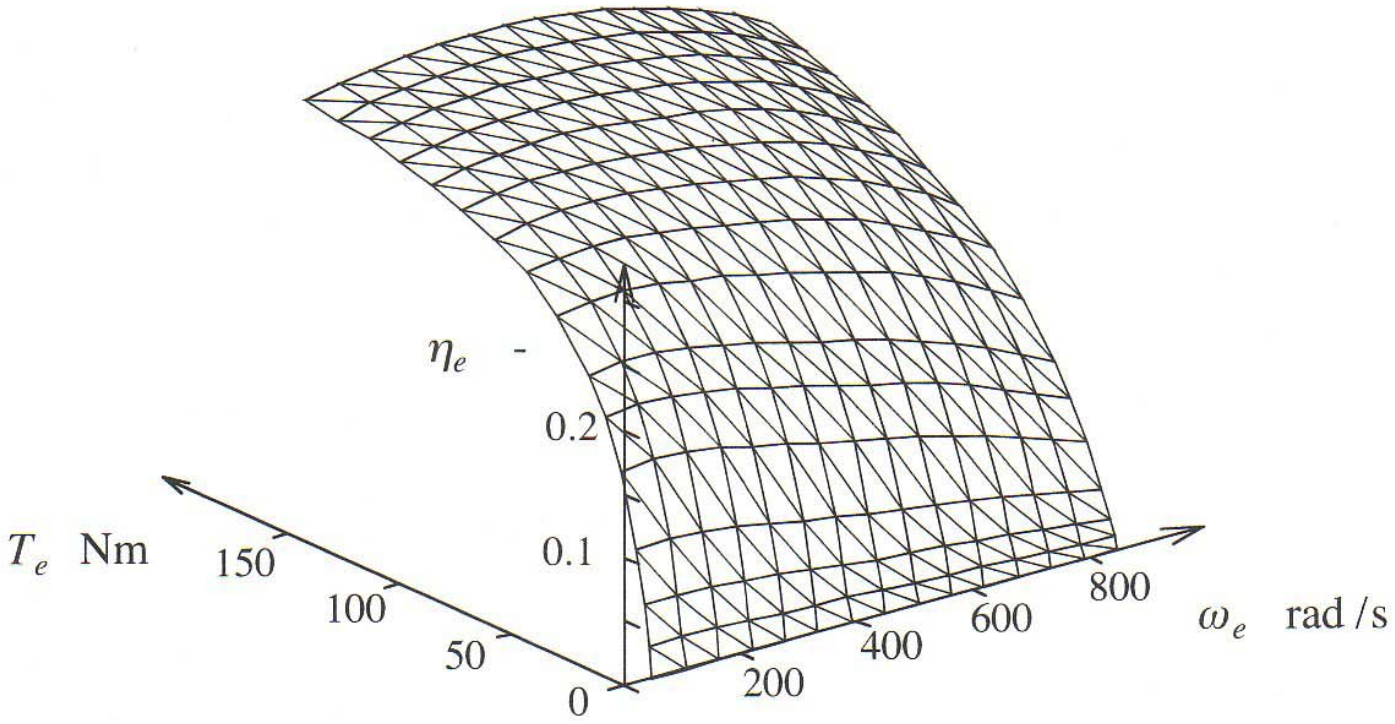

Courtesy L.Guzzella

IC engine efficiency as a function of engine torque and speed.

Low torque: Low efficiency

Quasi-static Approach

Vehicle is assumed to have constant inputs:

Speed v

Acceleration a

Road gradient α

Force F_t acting on the wheel is calculated with vehicle's main parameters A_f, c_d, c_r, m_v

Quasi-static approach is the average operating point approach on many intervals $t \in [(i-1)h, ih]$, $i=1,2,....$

$h=1$ second in MVEG-95 and PTF-75

Using Newton's Law

$$\overline{F}_{t,i} - \left(F_{a,i} + F_{r,i} + F_{g,i}\right) = m_v \overline{a}_i$$

or

$$\overline{F}_{t,i} = m_v \overline{a}_i + F_{a,i} + F_{r,i} + F_{g,i}$$

i.e.

$$\overline{F}_{t,i} = m_v \overline{a}_i + \frac{1}{2}\rho_a A_i c_d \overline{v}_i^2 + c_r m_v g \cos\alpha_i + m_v g \sin\alpha_i$$

Rotating parts can be included into m_v. i.e.

$$m_v \Rightarrow m_v + m_r$$

where

$$m_r = \frac{\Theta_w}{r_w^2} + \frac{\gamma^2}{r_w^2}\Theta_e$$

This approach can be used to analyse fuel consumption of complex powertrain structures.

$$\text{Energy demand}: \ \overline{E} = h \sum_{i \in tract} \overline{F}_{t,i} \overline{v}_i$$

$$\text{Fuel consumption}: \ J = \frac{\overline{E}}{H_l}$$

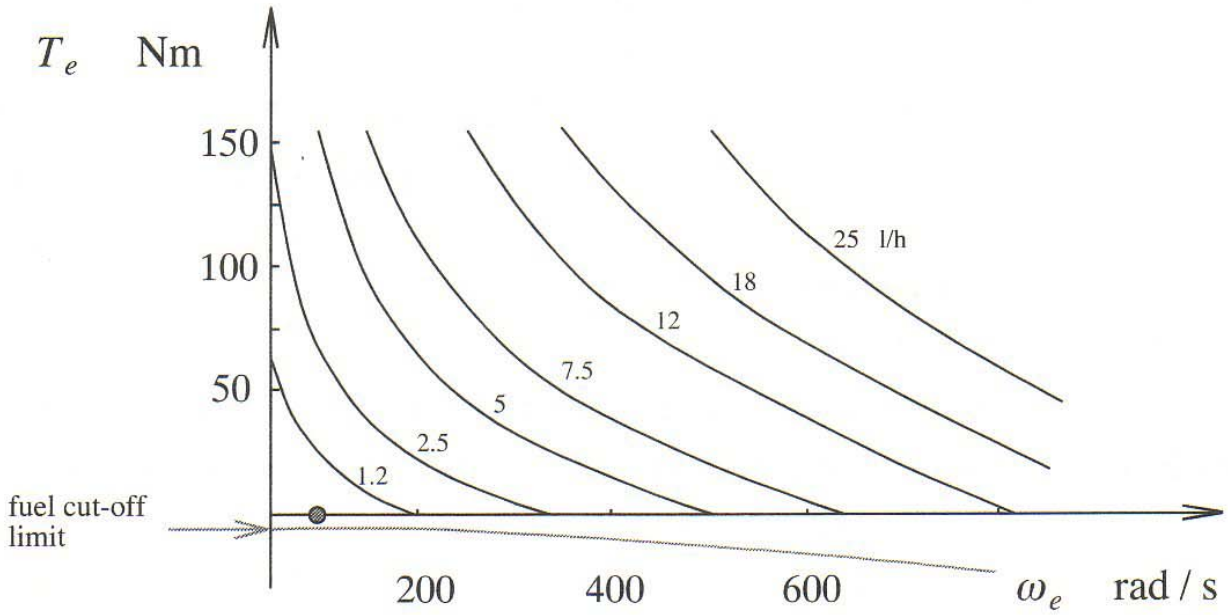

IC engine fuel consumption in liters per hour as a function of engine torque and speed.

In vehicle's deceleration, fuel cut-off limit is engine's resistance torque at certain speed e.g. 20 Nm at 600 rad/s. Power is from kinetic energy of vehicle.

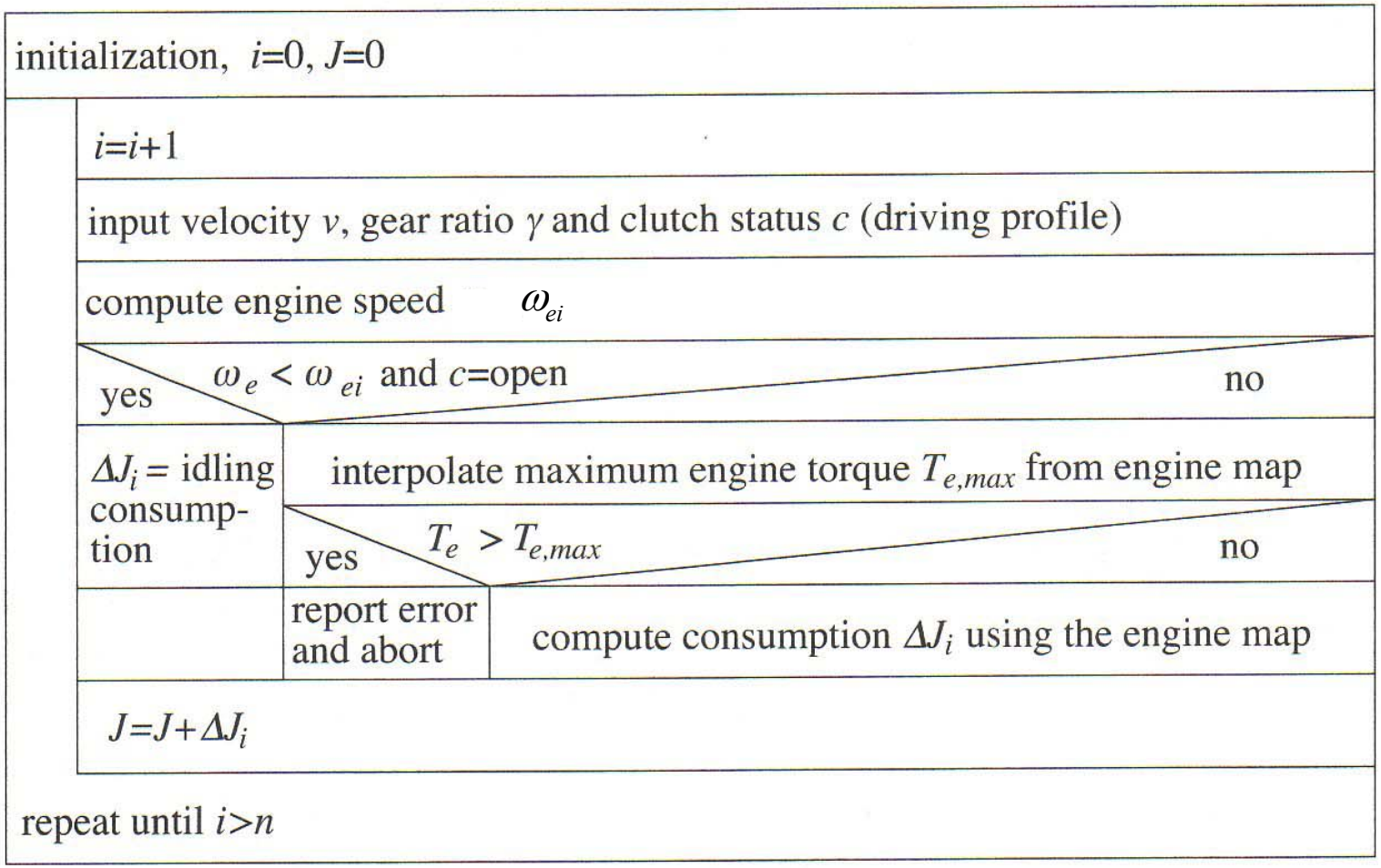

Structure of an algorithm for quasistatic fuel consumption.

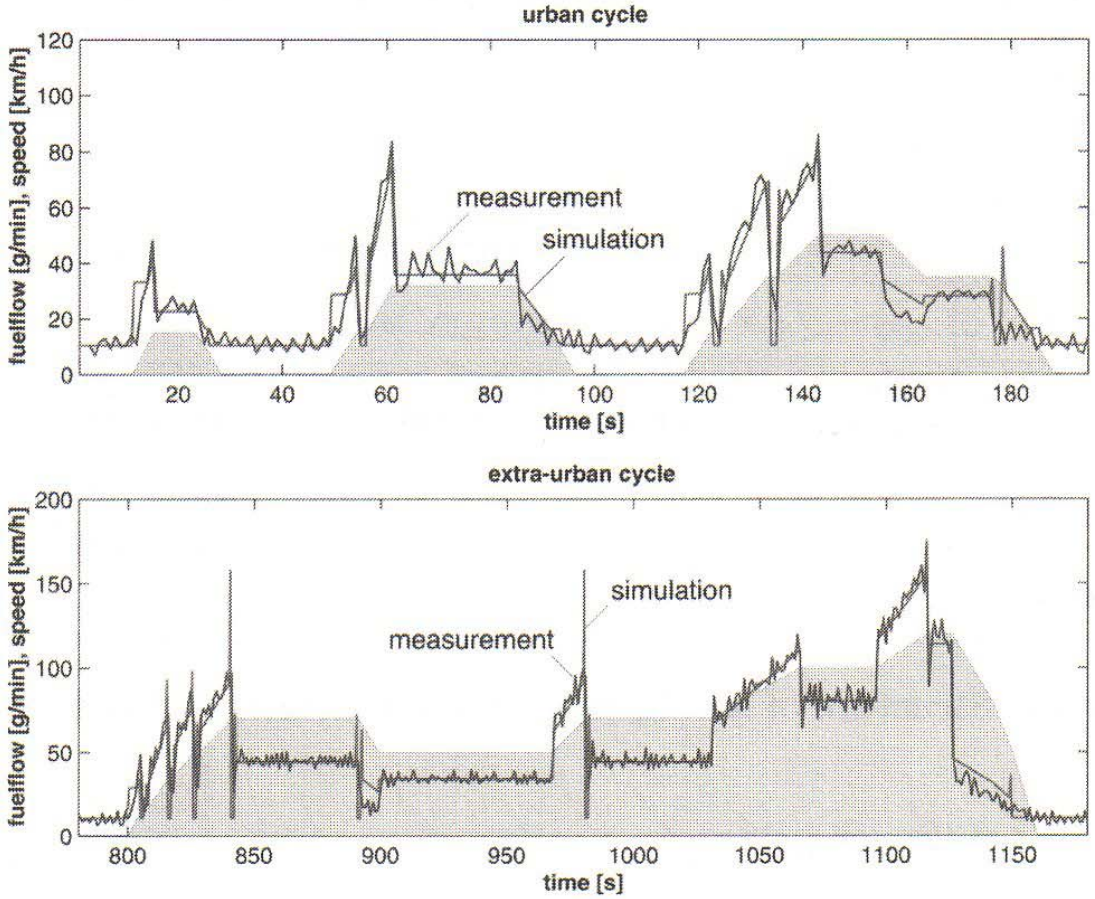

Comparison of measured and simulated fuel consumption.

3 Optimization Problems in minimizing fuel consumption in propulsion design

- Structural optimization
- Parameter optimization
- Control system optimization

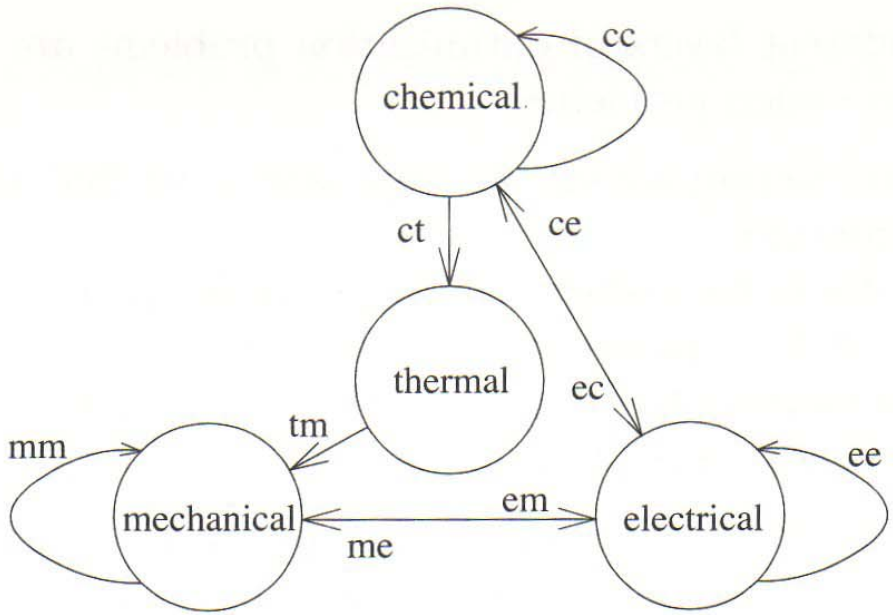

Energy domains relevant for the modeling and optimization of vehicle propulsion systems. Also shown are the feasible energy conversion paths (reversible with double arrows, non-reversible with single arrows)

IC Engine Propulsion System

IC engine efficiency

$$\eta_e = \frac{\omega_e T_e}{P_c}$$

where $P_c = m_l H_l$ – enthalpy flow, H_l – fuel heating value

(a) Quasistatic approach



(b) Dynamic approach



Engine input and output variables in the quasistatic and in the dynamic system description.

Normalized Engine Variables

Mean piston speed - mean speed over one revolution

$$c_m = \frac{\omega_e S}{\pi}$$

where S - Strock

Proof : Since $2S = c_m \frac{2\pi}{\omega_e}$, therefore $c_m = \frac{\omega_e S}{\pi}$

Typical less than 20m/s

Normalized Engine Variables

Mean effective pressure

$$p_{me} = \frac{N\pi\ T_e}{V_d}$$

where V_d – engine's displacement. For 4 stroke engine N = 4

Engine's displacement is the total volume of air/fuel mixture an engine can draw in during one complete engine cycle

Proof : For a 4 stroke engine

$$p_{me} V_d = 4\pi\ T_e$$

$$p_{me} = \frac{4\pi\ T_e}{V_d}$$

Typical value 10 Bar. Turbocharged 20 Bar.

Normalized Engine Variables

Engine Mechanical Power

$$P_e = z\frac{\pi}{16}B^2 p_{me} c_m$$

where

z – number of cylinders, B – cylinder bore

proof : for 4 stroke engine $P_e = z\left(\pi\left(\frac{\mathrm{B}}{2}\right)^2 \frac{p_{me}}{4}\right)c_m = z\frac{\pi}{16}B^2 p_{me} c_m$

Engine efficiency

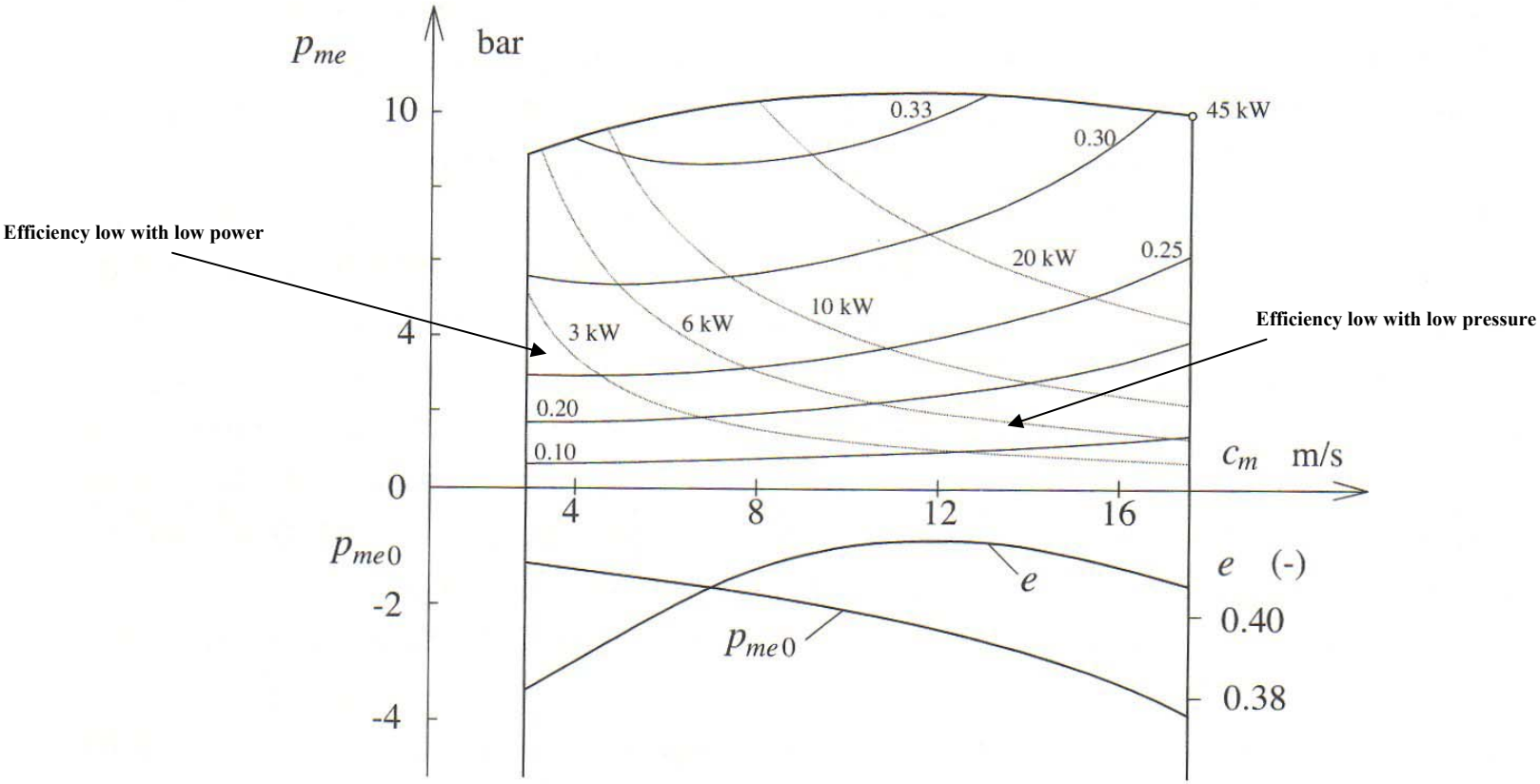

Engine map computed with a thermodynamic process simulation program. Naturally aspirated SI engine, strictly stoichiometric air/fuel mixture. Engine parameters: displaced volume $V_d = 710 \cdot 10^{-6}\,\mathrm{m}^3$, bore and stroke $B = S = 0.067\,\mathrm{m}$, compression ratio $\epsilon = 12$.

P_{me0} = mechanical loses. e – indicated engine efficiency

Gearbox Models

$\omega_1 = \gamma\ \omega_2$

$T_2 = \gamma\ T_1$

(a) Quasistatic approach

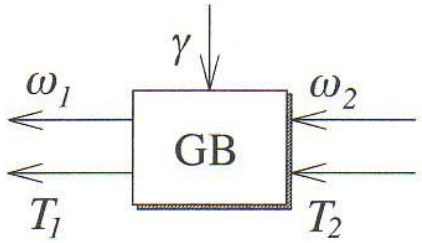

(b) Dynamic approach

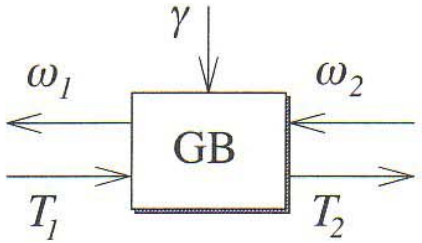

Gear box input and output variables in the quasistatic and in the dynamic system description.

Selection of Gear Ratios

The largest gear ratio is chosen to meet the towing requirements

$$(m_v g \sin\alpha_{\max}) r_\omega = \gamma_1 T_{e,\max}(\omega_e)$$

or

$$\gamma_1 = \frac{m_v g r_\omega \sin\alpha_{\max}}{T_{e,\max}(\omega_e)}$$

where r_ω – wheel raduis.

The smallest gear ratio (4th) is chosen to meet the maximum speed

$$\omega_e = \gamma_4 \omega_W, \qquad or \qquad \frac{c_{m,\max}}{2S} 2\pi = \frac{v_{\max}}{r_w}$$

$$\gamma_4 = \frac{r_w c_{m,\max} \pi}{v_{\max} S}$$

$v_{\max}$ can be found from $P_{e,\max} = v_{\max} F_{\max} = v_{\max}\left(m_v g c_r(v_{\max}) + \frac{1}{2}\rho_a A_f c_d v_{\max}^2 \right)$

Gearbox Types

- Manual
- Automatic Transmission
- Continuously Variable Transmission (CVTs)

It is often

$$\gamma_2 = \frac{2}{3}\gamma_1$$

$$\gamma_3 = \frac{2}{3}\gamma_2$$

$$\gamma_4 = \frac{2}{3}\gamma_3$$

...

Selection of Gear Ratios

The 5th gear ratio is chosen to meet fuel - economy optimization criteria – such as, most frequenctly used city speed 50km/h

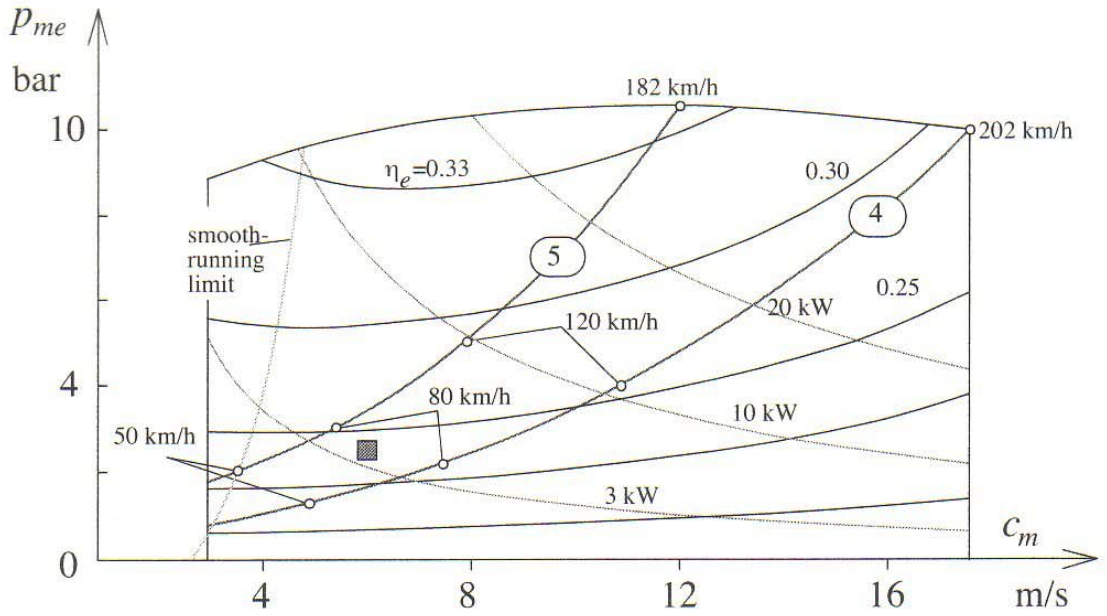

Engine map combined with two vehicle resistance curves (fourth and fifth gear on horizontal road) for the vehicle The grey square indicates the MVEG–95 average point.

Traction Force and Vehicle Speed

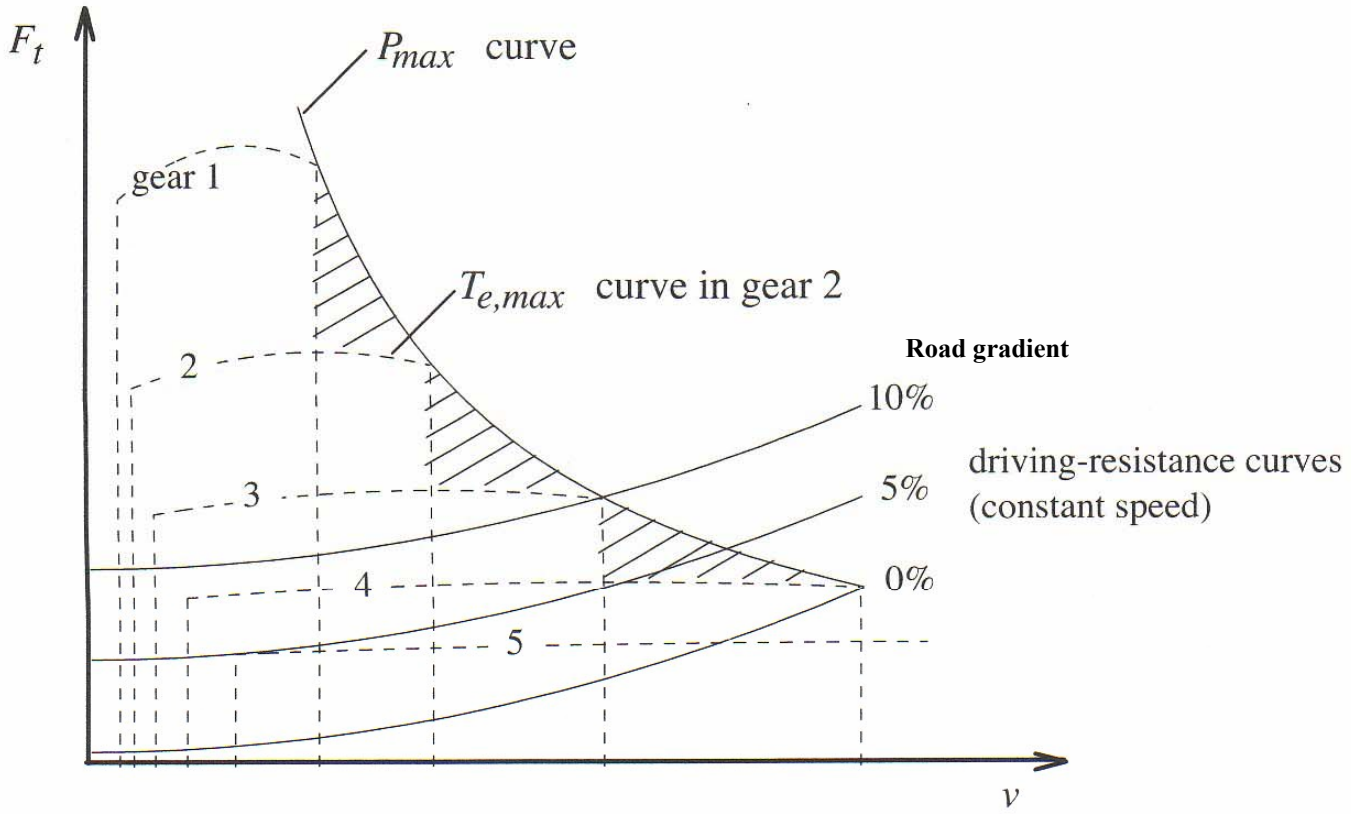

Traction force F_t as a function of vehicle speed v at maximum engine power P_{max}. The hyperbola is realizable using a CVT and the five dome-shaped regions using a manual gear box with five different gear ratios. Also shown are the total vehicle driving-resistance curves for three different values of constant road inclinations. Vehicle parameters $\{A_f \cdot c_d, c_r, m_v\} = \{0.4\,\mathrm{m}^2, 0.008, 850\,\mathrm{kg}\}$; engine map as illustrated in Fig. 3.2.

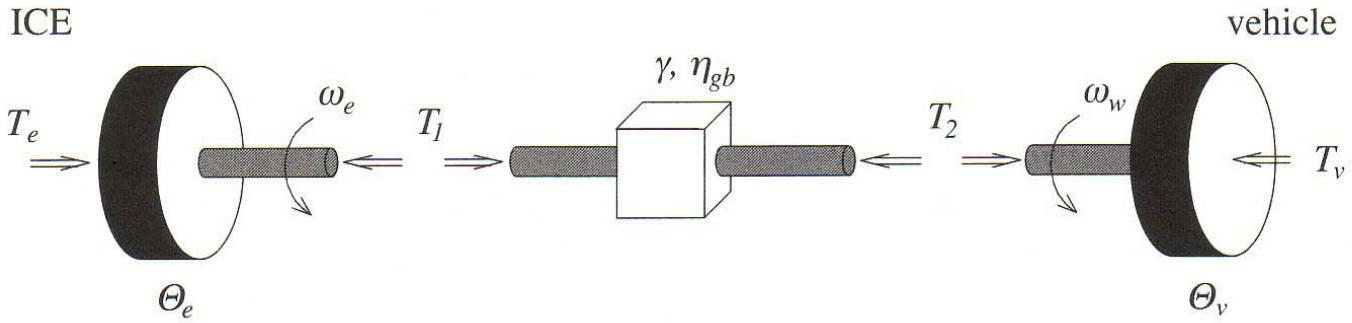

Illustration of the definitions relevant for the modeling of the gear-box efficiency.

Power equation

$$T_2\omega_2 = \eta_{gb}T_1\omega_e - P_{0,gb}(\omega_e)$$

where

$P_{0,gb}(\omega_e)$ is the power of gearbox required to idle at speed ω_e

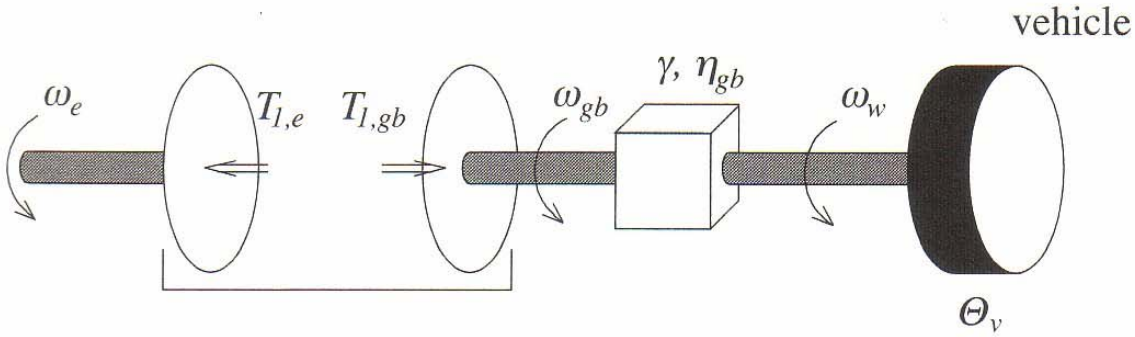

Illustration of the definitions relevant for the modeling of the clutch and torque converter efficiency.

Energy transferred to the vehicle by clutch

$$E_c = \frac{1}{2}\Theta_v \omega_{w,0}^2$$

Speed difference between clutch disks $\Delta\omega$ and clutch torque.

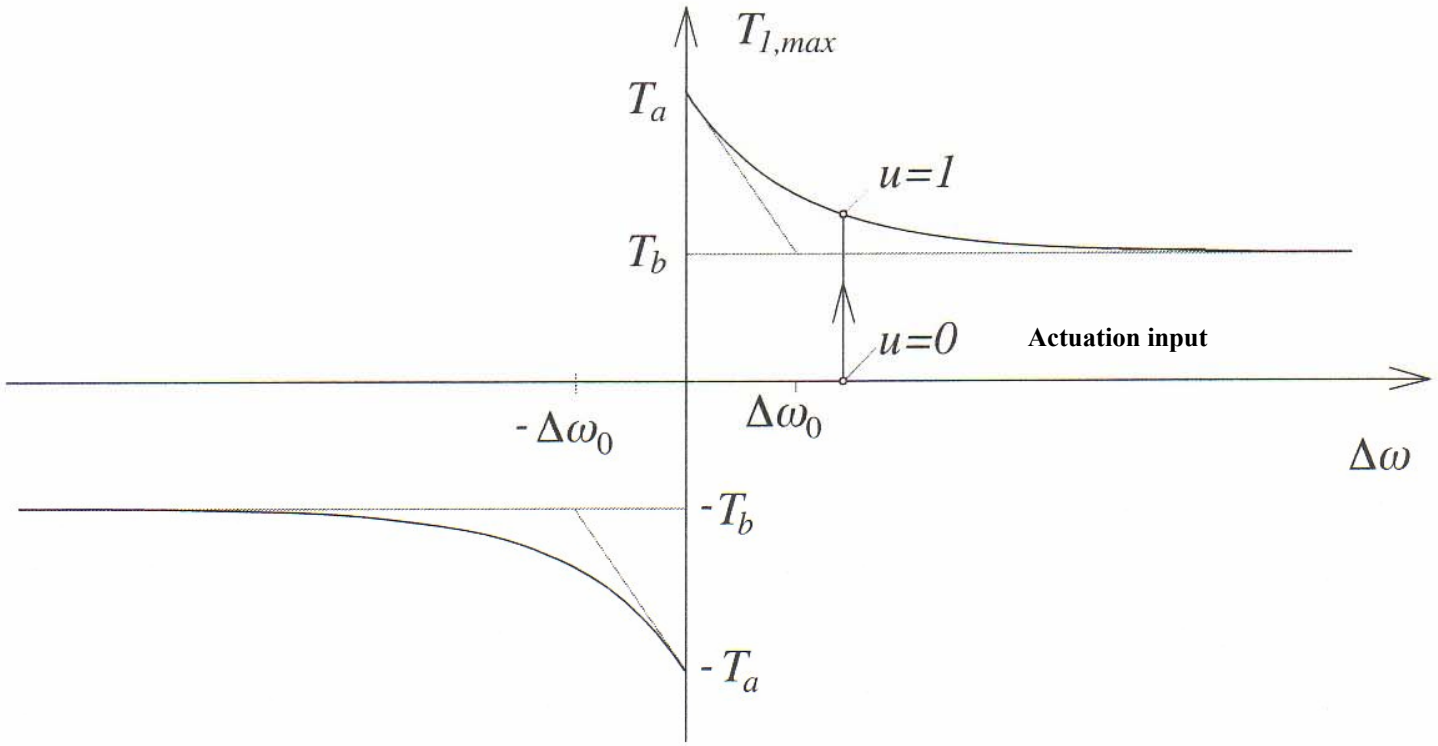

Approximation of the maximum torque of a friction clutch.

The clutch torque:

$$T_1(t) = T_{1,\max}(\Delta\omega)\cdot u(t)$$

where

$$\Delta\omega = \omega_{1,e} - \omega_{1,gb}$$

Fuel Consumption of IC Engine Power Trains

Average Operating Point Method

SmILE vehicle
MVEG-95 cycle

$\overline{F}_{tract} = 210N$

$$\overline{P}_{tract} = \frac{\overline{P}_{tract}\bar{v}}{t_{tract}} = \frac{210N9.5m/s}{0.6s} = 3.3kW \qquad (t_{tract} - \text{time fraction in traction mode})$$

Power input of the gearbox

$$P_1 = \frac{\overline{P}_{tract} + P_{0,gb}}{\eta_{gb}} = \frac{3.3+0.3}{0.97} = 3.7kW$$

Auxiliaries

$\overline{P}_{aux} = 0.25kW$

Power in fuel required

$$\overline{P}_f = t_{tract}\frac{\overline{P}_e}{\eta_e} = 0.6(3.7+0.25)/0.24 = 10kW$$

Fuel required

$$V_f = \frac{\overline{P}_f}{H_l \rho_f} = \frac{10{,}000W}{43{,}000{,}000J/kg \times 0.75kg/l} = 3.1 \times 10^{-4} l/s$$

For average speed of 9.5m/s in MVEG - 95,

the time = 100,000m/9.5s = 10526s

For 100km, fuel consumption :

$3.1 \times 10^{-4} l/s \times 10526\text{s} = 3.26l$

QuasiStatic Simulation Toolbox

QuasiStatic Simulation Toolbox
provides a fast and simple estimation of the fuel consumption for many powertrain systems.

Prerequisites
For a user to work efficiently with the QSS toolbox:

- Users must be familiar with Matlab/Simulink™
- Users must have a basic understanding of the physics and the design of powertrain systems.

What the QSS TB can do

The QSS TB makes it possible for powertrain systems to be designed quickly and in a flexible manner and to calculate easily the fuel consumption of such systems. The QSS TB contains examples of a number of elements. Chapter 2 contains detailed descrip-tions of all these elements.

Users with a good grasp of the "philosophy" behind the QSS TB (Sec. 1.2), who know the general structure of a QSS TB program (Sec. 3.1) and who have read the commentary in Section 3.2 below are well prepared, once they have gained a little experience, to readily design and include new elements of their own.

The most efficient use of the QSS TB can be made once users fully understand the techniques required (i.e., the optimization routines) to integrate the toolbox with other programs. This allows a smooth integration with the functionality of Matlab™ and all its other toolboxes.

Due to the extremely short CPU time it requires (i.e., on a regular PC, a speedup factor of 100 to 1000 for a conventional powertrain), a QSS model is ideally suited for the optimization of the fuel consumption under various control strategies.

What the QSS TB cannot do

The quasistatic approach obviously is not suitable for the capture of dynamic phe-nomena, i.e. those adequately described by differential equations.
There are numerical approaches better suited for the efficient solution of those problems.

Typical examples of such problems are drivetrain ringing phenomena or the analysis of state events such as stickslip effects.

The QSS TB could be used for the calculation of vehicle pollutant emis-sions as well.

Due to the current lack of reliable and easily acquired data describing the physics with sufficient accuracy, this second version of the toolbox does not include these aspects.

Simulink examples: using QSS

1.Create a simple drive cycle consisting of a constant acceleration followed by a period at constant speed and finally a constant deceleration. Use the components in the QSS toolbox to calculate the torque required. Increase the car's mass by 25% and re-calculate. Estimate the increased power requirement.

2.The NEDC includes gear changes, while the FTP-75 is defined simply as a speed profile against. Identify the gear change speeds from the NEDC, and create a gear change profile for the FTP-75. Run the cycle with the same car parameters. Why are the fuel economy numbers different?

3.Identify a way (in QSS) of estimating the deceleration energy. [Hint you can identify this when the torque at the road wheels goes negative.] Estimate this braking energy flow for each of the two cycles.

4.Create a vehicle model using the components of QSS. Using the parameters supplied in the example, calculate and plot the torque requirement for the first 5 minutes of each of the NEDC (New European Drive Cycle) and the FTP-75 cycle.

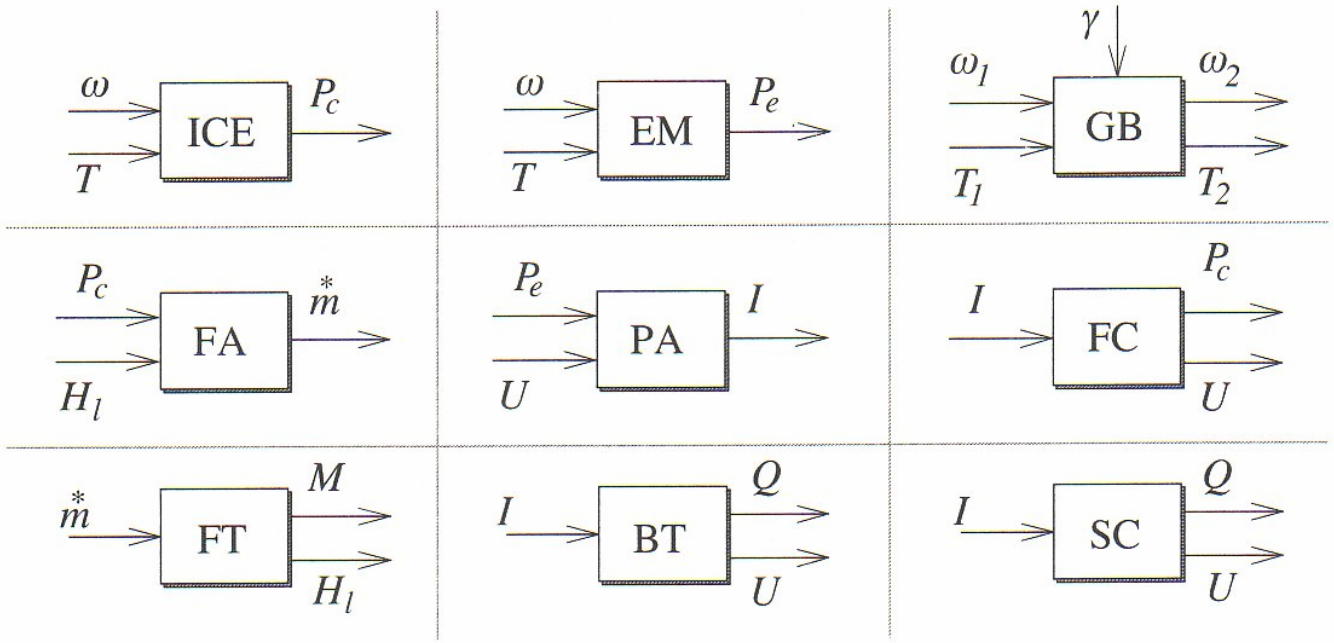

Interfaces of main blocks of a QSS simulation environment. ICE = IC engine, FA = fuel amplifier (fuel control), FT = fuel tank, EM = electric motor, PA = power amplifier (current control), BT = battery, GB = gear box, FC = fuel cell, SC = supercapacitor.

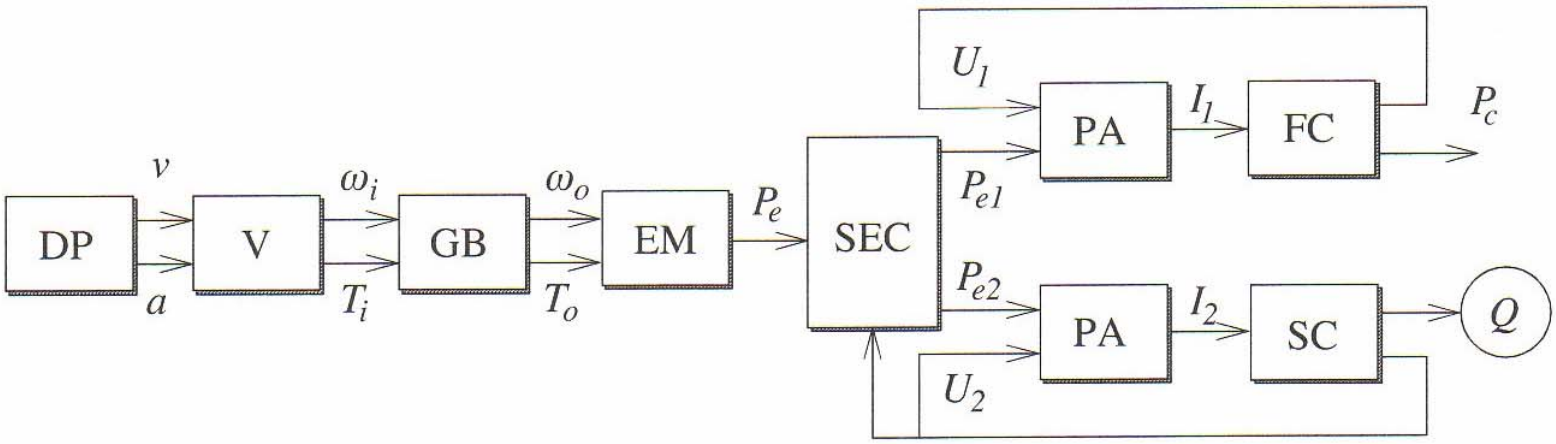

Part of a QSS Toolbox model of a fuel-cell electric powertrain (detailed model description in [5]). Blocks not yet introduced so far: DP = driving profile, V = vehicle, SEC = supervisory energy control system.

Vehicle Example

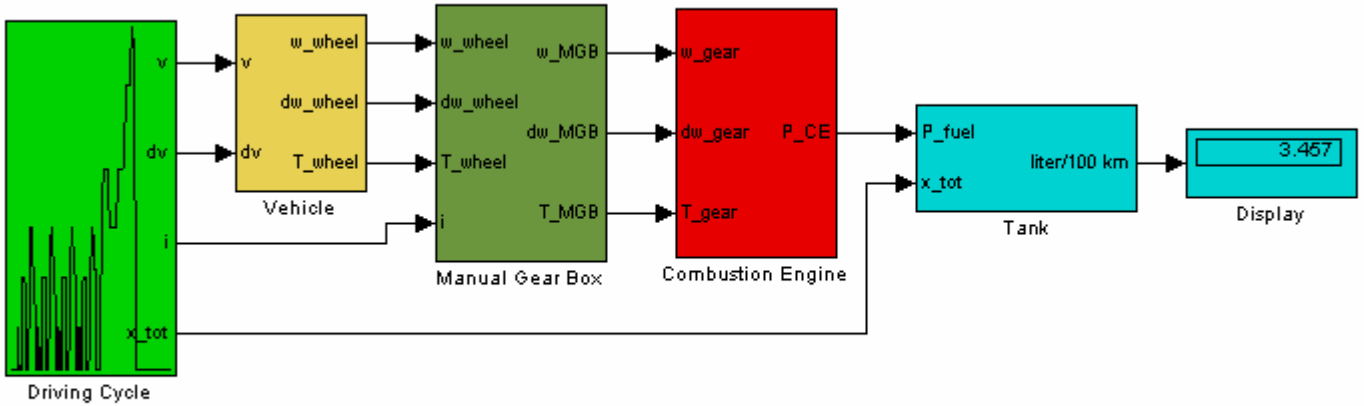

Name	Size	Type	Date Modified
plot_example_intro.m	2 KB	MATLAB M-file	18/03/2005 10:01
qss_example_intro.mdl	25 KB	Simulink model file	02/06/2005 11:08
README.m	1 KB	MATLAB M-file	02/06/2005 07:25

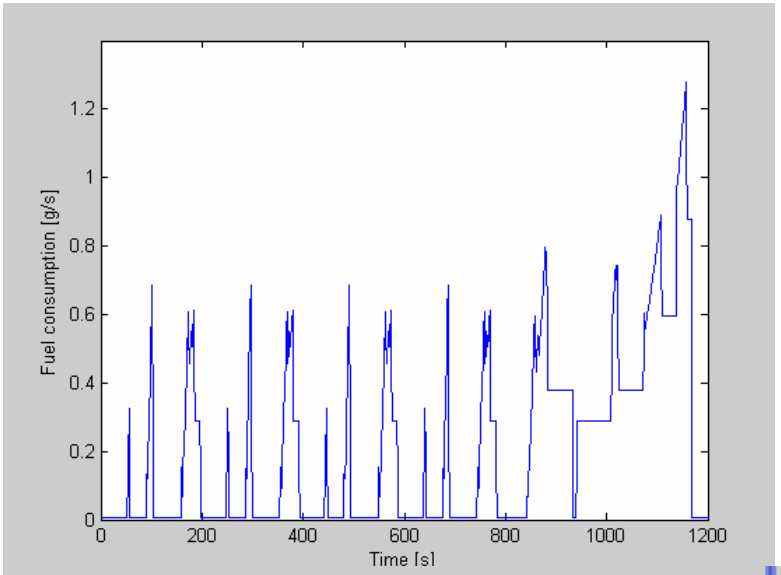
Fuel consumption [g/s]
Time [s]
0
0.2
0.4
0.6
0.8
1
1.2
0
200
400
600
800
1000
1200

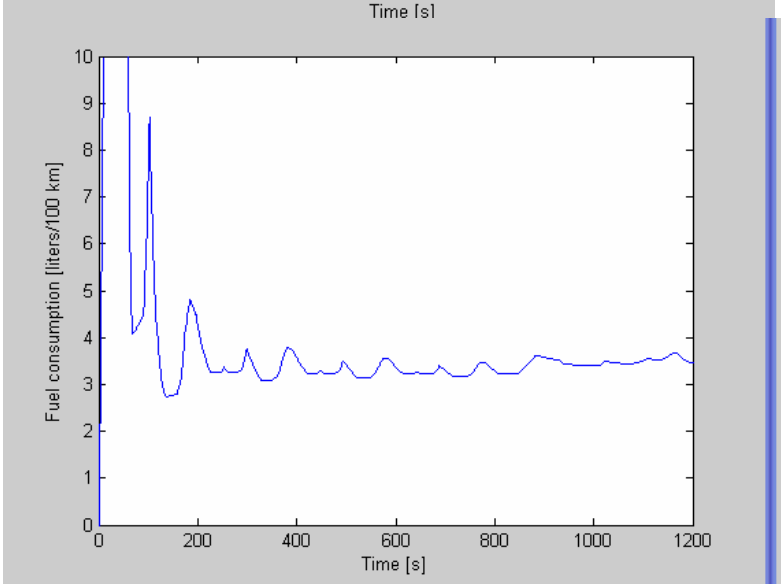
Fuel consumption [liters/100 km]
Time [s]
0
1
2
3
4
5
6
7
8
9
10
0
200
400
600
800
1000
1200

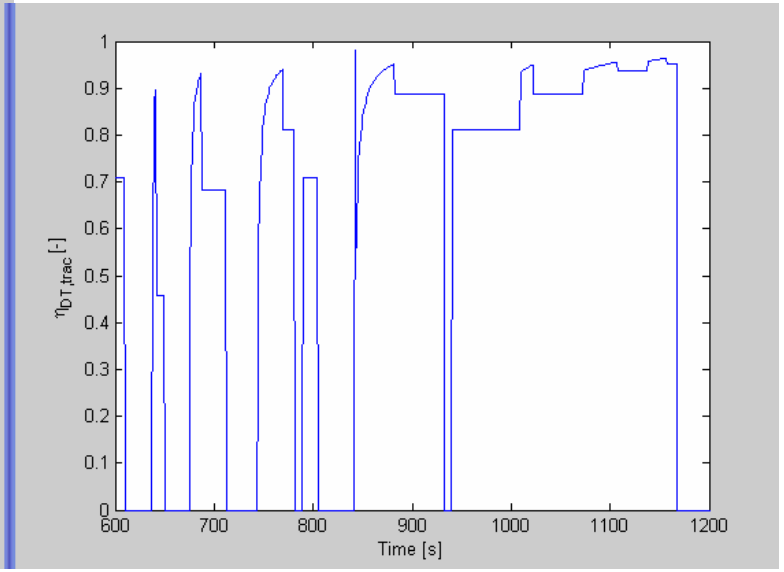
$\eta_{DT,trac}$ [-]
Time [s]
0
0.1
0.2
0.3
0.4
0.5
0.6
0.7
0.8
0.9
1
600
700
800
900
1000
1100
1200

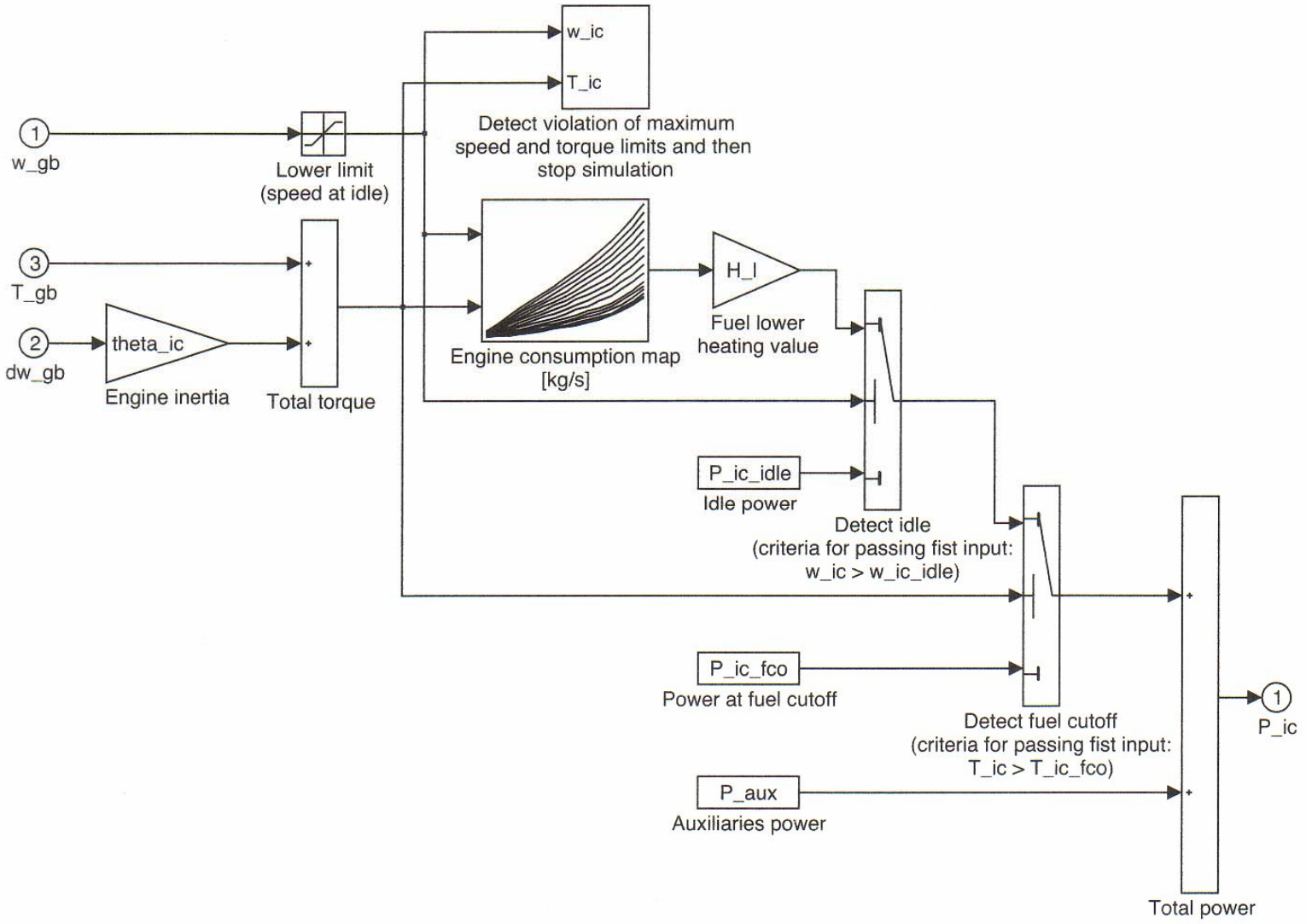

Structure of the block "IC engine" of Fig. 3.11.

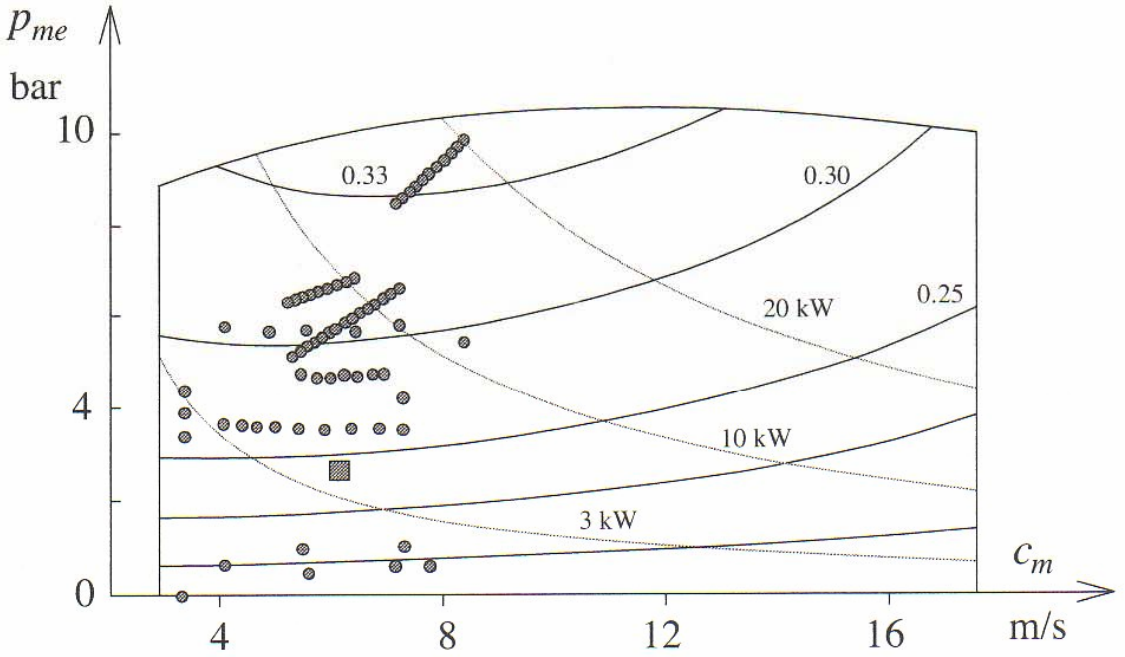

Engine operating points of the example of this section for the MVEG–95 cycle. Also shown is the average operating point used in the previous section.

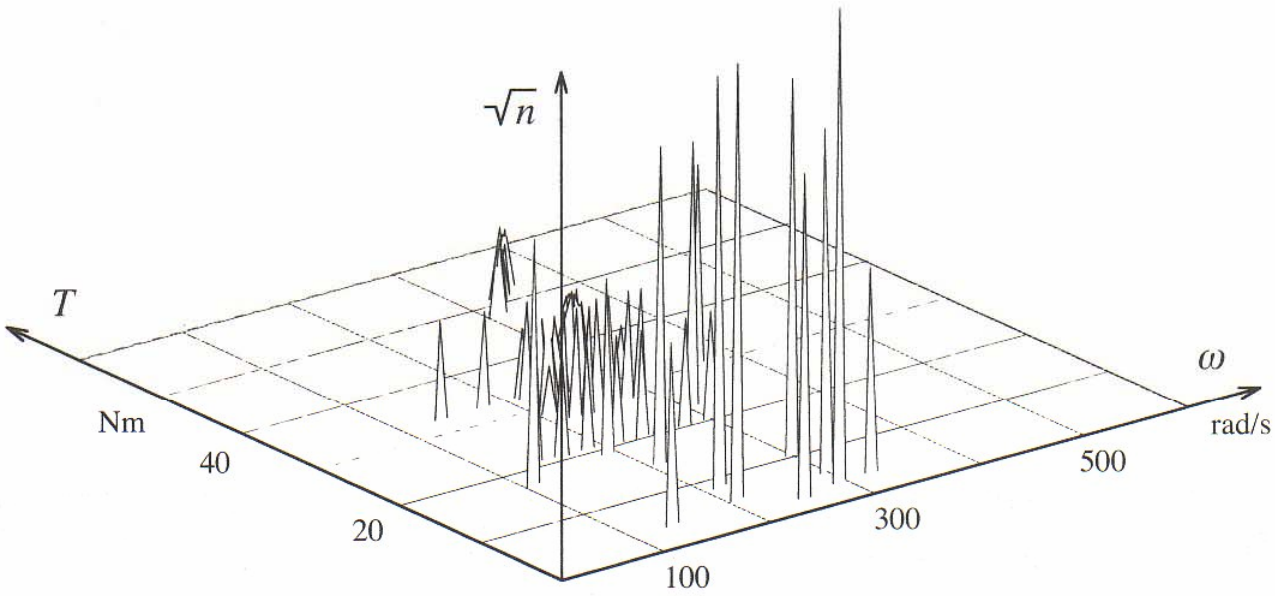

Distribution and frequency of the engine operating points (*square root* of the number of counts for each non-zero engine load/speed point).

Hybrid Vehicle Example

with a battery

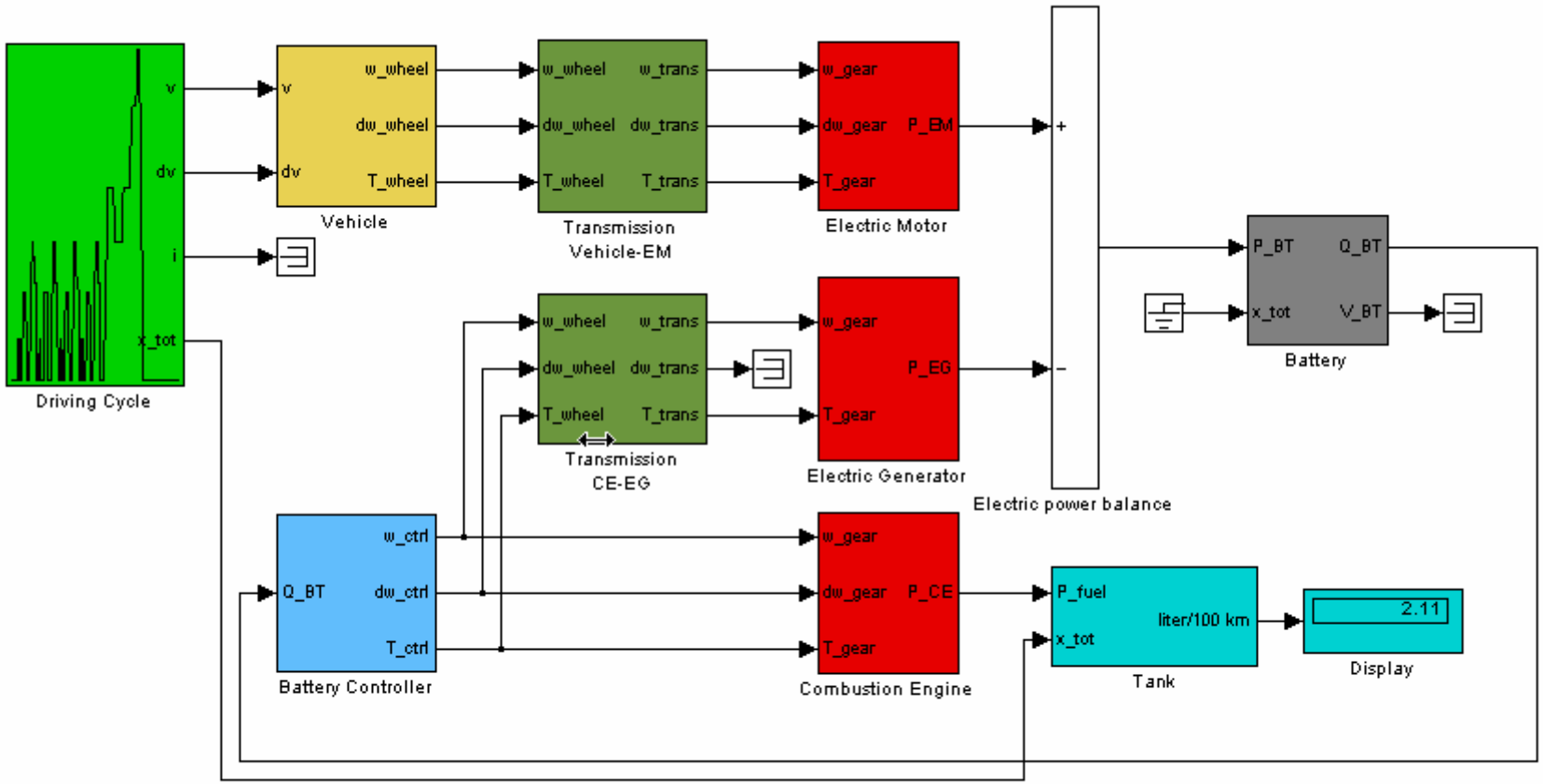

Hybrid Vehicle Example

With a supercapacitor.

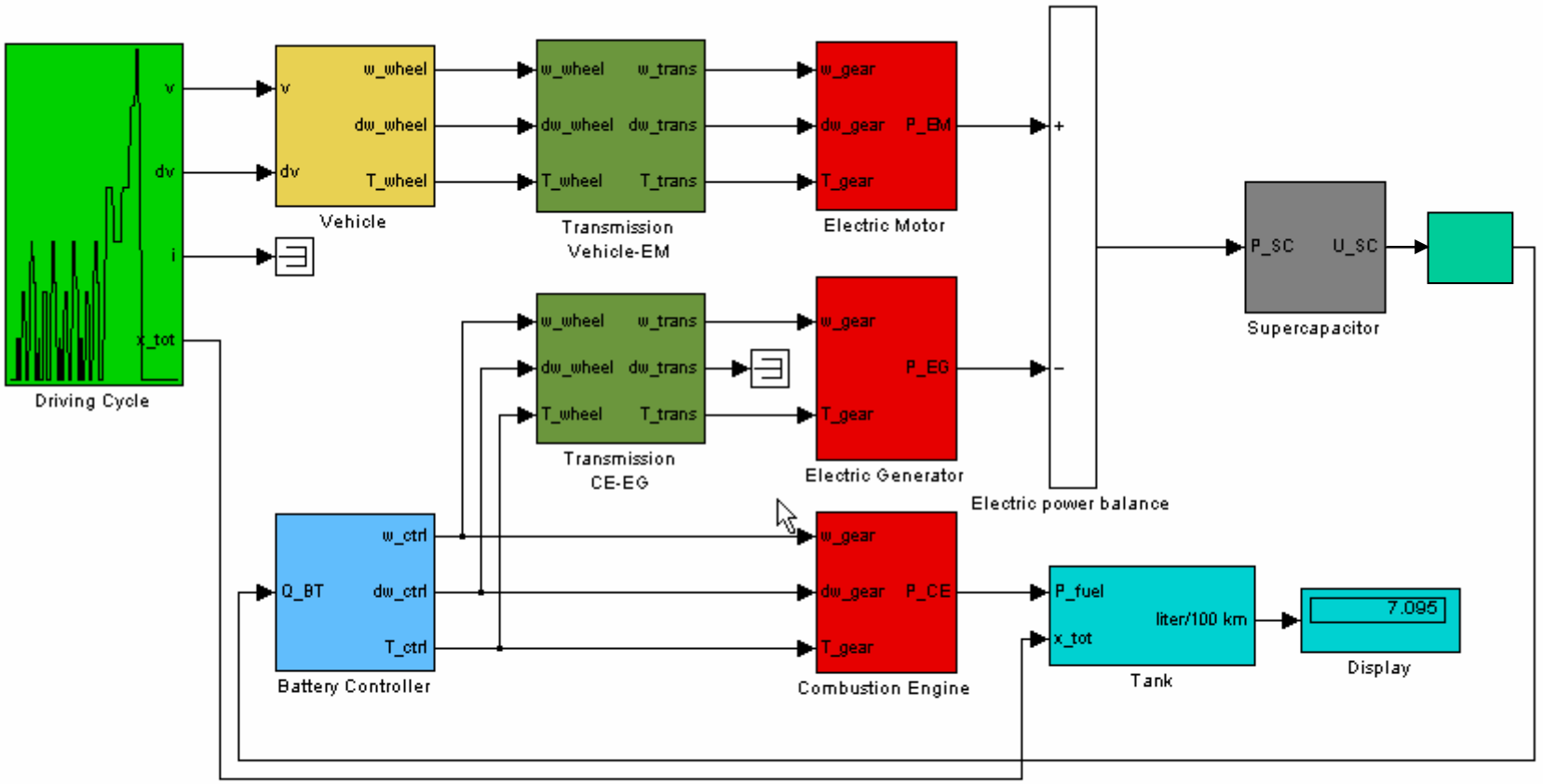

Hint: the output of a supercapacitor is voltage, different from the charge - the output of battery. $Q = \int Idt, \quad I = V / R$

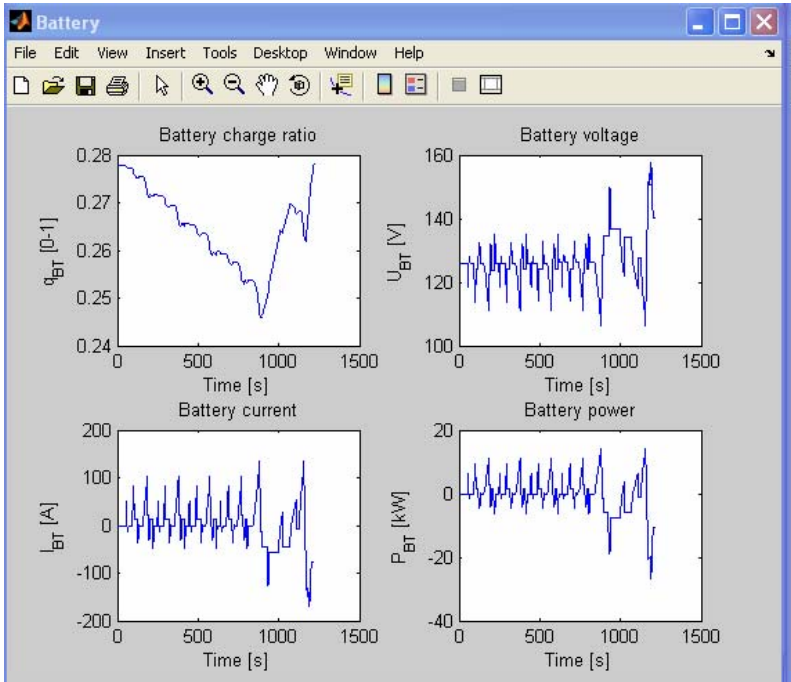
Battery
File Edit View Insert Tools Desktop Window Help
Battery charge ratio
q_{BT} [0-1]
Time [s]
Battery voltage
U_{BT} [V]
Time [s]
Battery current
I_{BT} [A]
Time [s]
Battery power
P_{BT} [kW]
Time [s]

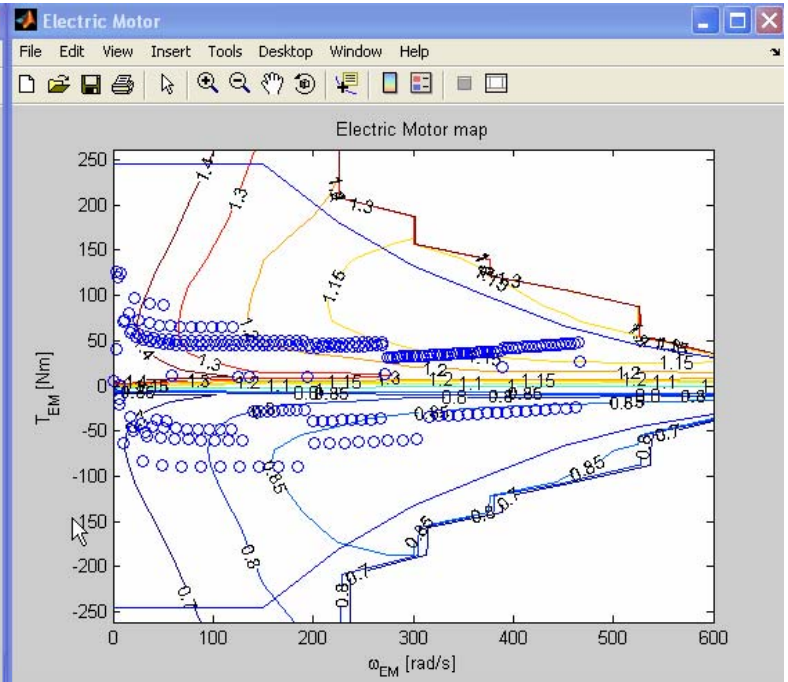
Electric Motor
File Edit View Insert Tools Desktop Window Help
Electric Motor map
T_{EM} [Nm]
ω_{EM} [rad/s]

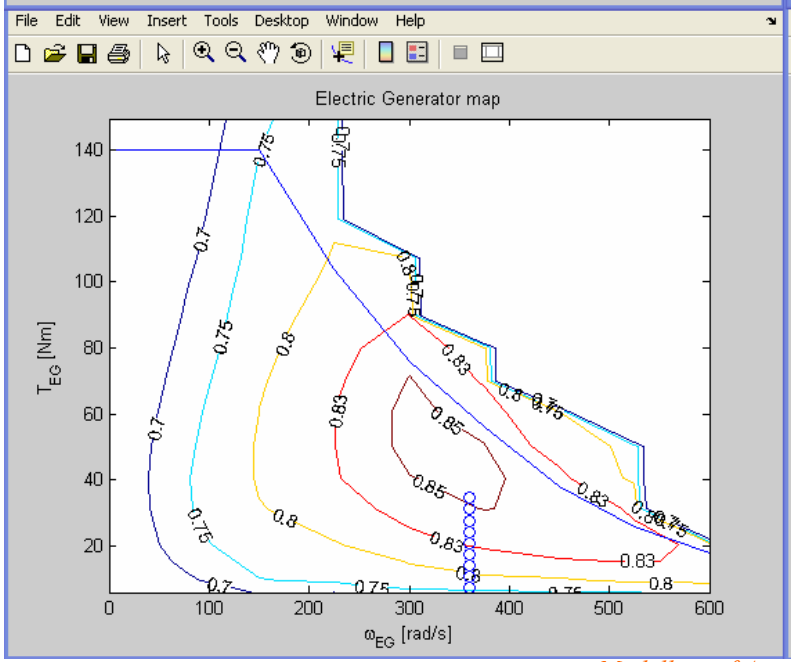
File Edit View Insert Tools Desktop Window Help
Electric Generator map
T_{EG} [Nm]
ω_{EG} [rad/s]

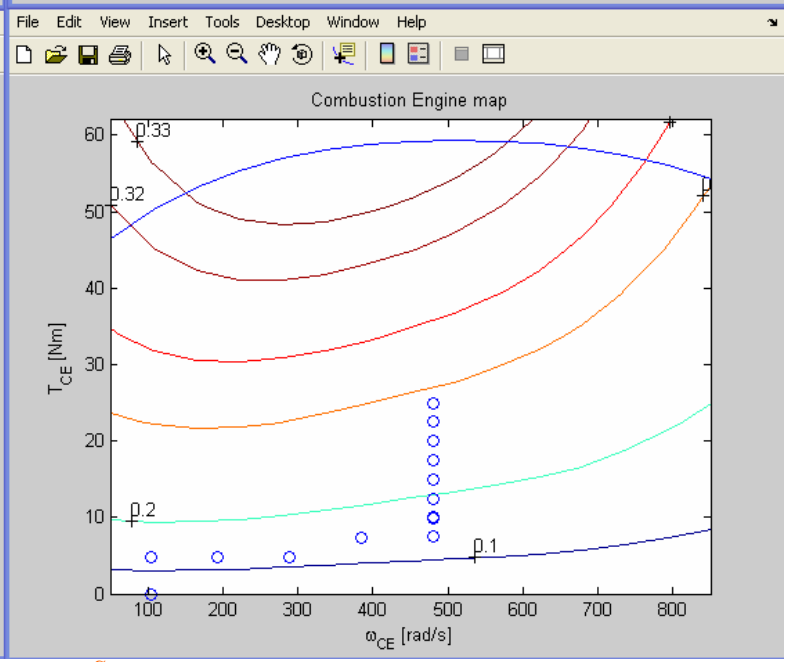
File Edit View Insert Tools Desktop Window Help
Combustion Engine map
T_{CE} [Nm]
ω_{CE} [rad/s]

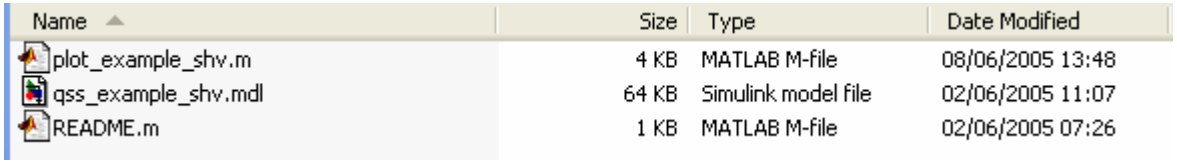

Name	Size	Type	Date Modified
plot_example_shv.m	4 KB	MATLAB M-file	08/06/2005 13:48
qss_example_shv.mdl	64 KB	Simulink model file	02/06/2005 11:07
README.m	1 KB	MATLAB M-file	02/06/2005 07:26

```
% ######################################################################
%
% ================================================
% Series Hybrid Vehicle (QSS TB manual, Sec. 3.1)
% ================================================
%
%
% Description
% -----------
%   QSS model of a series hybrid vehicle.
%
%
% Running the QSS program
% -----------------------
%   1. Open the Simulink file "qss_example_shv.mdl".
%   2. Start the simulation.
%   3. Use the m-file "plot_example_shv.m" to display the results.
%
% ######################################################################
```