Design, Modelling and Manufacture 3

H7082

5

-Finite Element Analysis for 3D Solid Structures

Axial Symmetrical Structure

General structure

-ANSYS imported Files

- ProEngineer Stress Analysis

- Mechanca

- FEA with other solver after meshing

ANSYS imported CAD Files

IGES Files
The Initial Graphics Exchange Specification (IGES) is a standard format used to exchange geometric models between various CAD and CAE systems.

Utility Menu > File > Import > IGES

ProEngineer has IGES output

Axial Symmetrical Structures



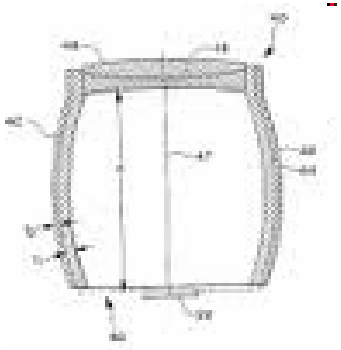

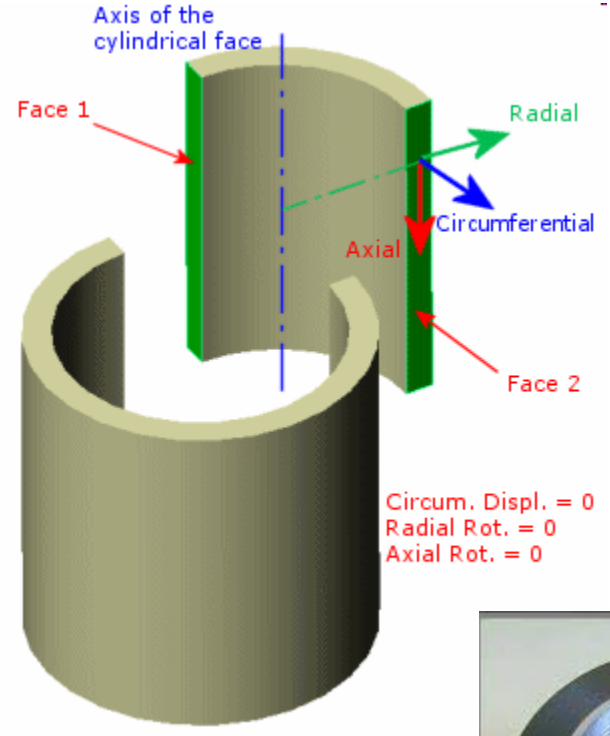



An axisymmetric structure can be modelled as 2D model under axisymmetric load and boundary conditions.

Create an axisymmetric model

Preprocessor > Eelement Type > Add > Solid > 8Node82

PLANE82 – Options – Axisymmetric

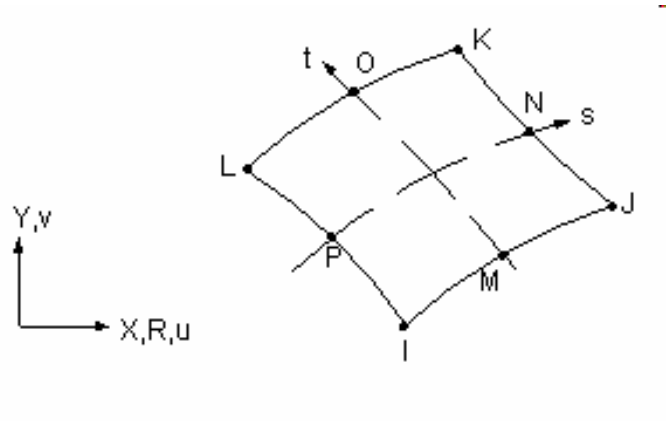

An axisymmetric structure in general cases of load and boundary conditions / dynamic modal analysis

Create an axisymmetric model

Preprocessor > Modeling > Create > Keypoints – lines – areas (by lines)

Preprocessor > Modeling > Operate > Extrude> Areas – About Axis /along lines – 360 degrees

ProEngineer Stress Analysis

Using Mechanica

- **Applications > Mechanica > Structure, Bonded**
- **Properties > Materials …**
- **Properties > Matrrials assignment**
- **Apply constraints, forces/pressure**
- **Analysis – Mechanical Analysis > File > New Static> … 'completed' , OK and Show**

(Demo and follow in the class)

- FEA interface with other solver after meshing

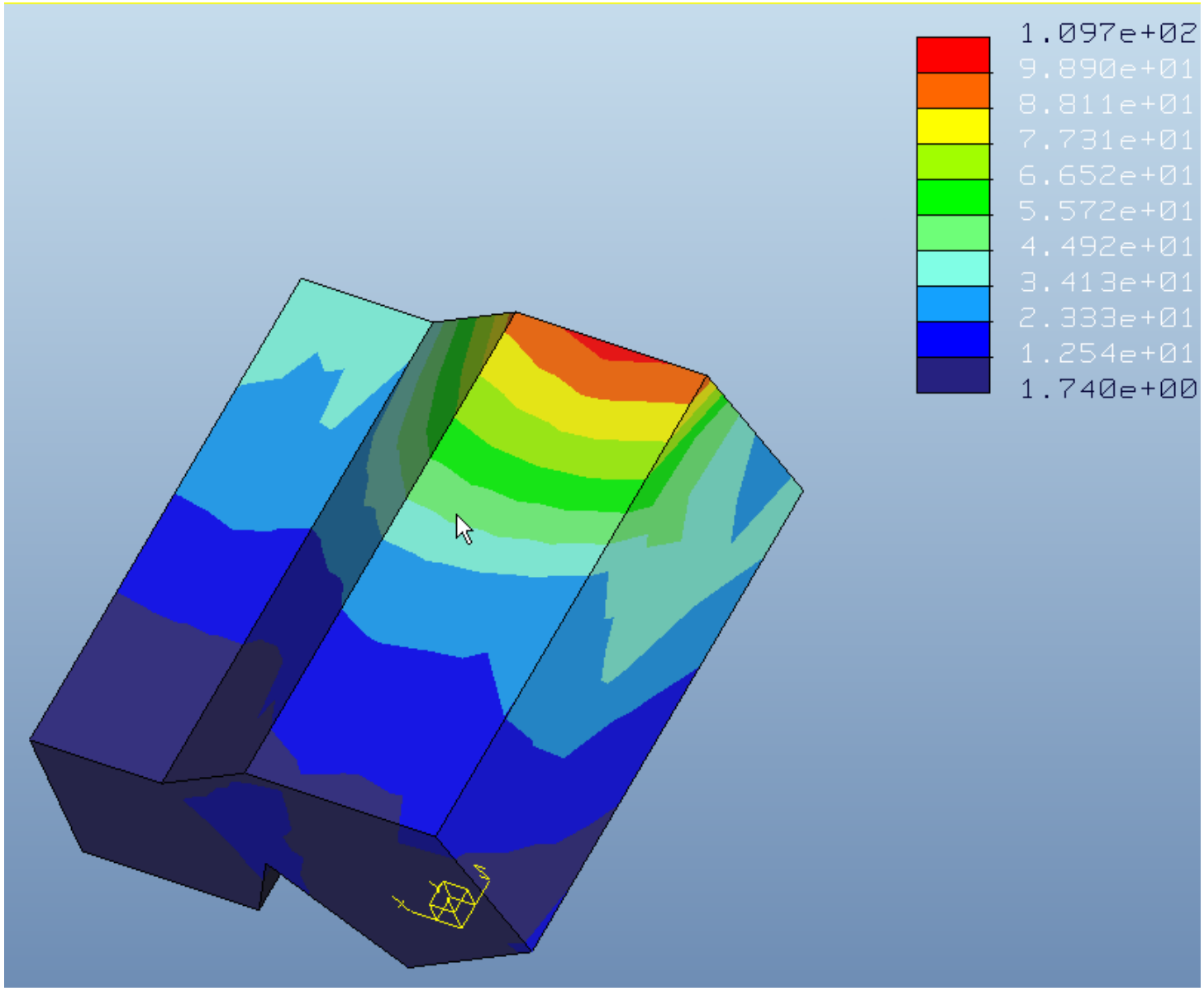
1.097e+02
9.890e+01
8.811e+01
7.731e+01
6.652e+01
5.572e+01
4.492e+01
3.413e+01
2.333e+01
1.254e+01
1.740e+00