University of Sussex

Design, Modelling and Manufacture 3

H7082

Level 2

6 credits

Summer Term

H7082 Design, Modelling and Manufacture 3

Assessment: Attend the labs when scheduled; work submitted to the School Office before 4pm on the submission day (Tuesday)

Type	Timing	Weighting
Coursework		100.00%
Exercise	Summer Week 5	equal weighting
Exercise	Summer Week 6	equal weighting
Exercise	Summer Week 7	equal weighting

H7082 Design, Modelling and Manufacture 3

Resit Mode

Unseen Examination (90min), Summer Vacation, Weighting 100%

Pre-requisite

Engineering Design, Design Modelling and Manufacture 2

Contact details

Dr W Wang

w.j.wang@sussex.ac.uk

Richmond 3A10

Course Outline

- Introduction to finite-element analysis.
- Ansys software package.
- Structural modelling using both Solid Modelling and Direct Modelling.
- Material properties and real constants.
- Displacement constraints and loading.
- Mesh-control commands and automatic mesh generation.
- Verification and validation of solutions.
- Structures with axial symmetry – both mirror and rotational.

Learning outcomes

- Import 1-3D geometry for FE analysis
- Generate and check a mesh
- Generate an FE analysis solution for a 3D geometry
- Validate the solution

Reading List

- C.T.F.Ross, Finite Element Methods in Engineering Science by, Ellis Horwood
- Fagan, M.J, Finite Element Analysis - Theory and Practice, Longman Scientific and Technical
- A. Moaveni, Finite Element Analysis – Theory and Application with ANSYS
- T.Stolarski, et al. Engineering Analysis with ANSYS Software
- P.I.Kattan, Matlab guide to finite elements
- A.J.M. Ferreira, MATLAB Codes for Finite Element Analysis - Solids and Structures
- Lund University, CALFEM – A finite element toolbox to MATLAB (free downloadable)

Why Need Finite Element Method

Safety concern and design guide for structure and machines

- Strength limit of materials – stress calculation
- Deformation under load

Realistic engineering structural analysis

- FEM is a digital computer accepted form.
- In most cases, for representing deformation under load, or stress in a certain deformation, there is no precise analytical solution - FEM is an realistic approximation solution.
- FEM - General treatment for complex structures - representing a complex shape using simple shapes.

History of Finite Element Method

- FEM originated from the need for solving complex elasticity and structural analysis where no analytical solution can be used.
- History can be traced back to the work by Alexander Hrennikoff (1941) and Richard Courant (1942)
- Fast advanced computers promoted FEM in 60's and 70's
- FEM allows detailed visualization (simulation) of where structures bend or twist, and indicates the distribution of stresses and displacements

BEAM DEFLECTION FORMULAE

BEAM TYPE	SLOPE AT FREE END	DEFLECTION AT ANY SECTION IN TERMS OF x	MAXIMUM DEFLECTION
1. Cantilever Beam – Concentrated load P at the free end			
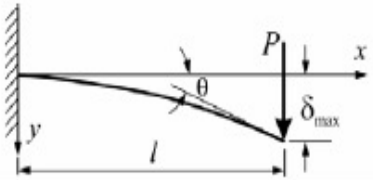	$\theta = \frac{Pl^2}{2EI}$	$y = \frac{Px^2}{6EI}(3l - x)$	$\delta_{max} = \frac{Pl^3}{3EI}$
2. Cantilever Beam – Concentrated load P at any point			
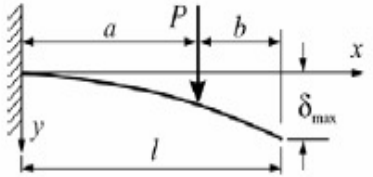	$\theta = \frac{Pa^2}{2EI}$	$y = \frac{Px^2}{6EI}(3a - x)$ for $0 < x < a$ $y = \frac{Pa^2}{6EI}(3x - a)$ for $a < x < l$	$\delta_{max} = \frac{Pa^2}{6EI}(3l - a)$
3. Cantilever Beam – Uniformly distributed load ω (N/m)			
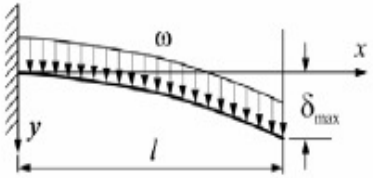	$\theta = \frac{\omega l^3}{6EI}$	$y = \frac{\omega x^2}{24EI}(x^2 + 6l^2 - 4lx)$	$\delta_{max} = \frac{\omega l^4}{8EI}$
4. Cantilever Beam – Uniformly varying load: Maximum intensity ω_o (N/m)			
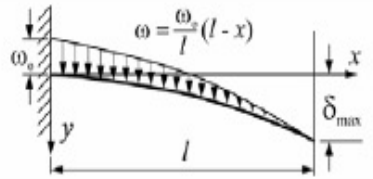	$\theta = \frac{\omega_o l^3}{24EI}$	$y = \frac{\omega_o x^2}{120lEI}(10l^3 - 10l^2x + 5lx^2 - x^3)$	$\delta_{max} = \frac{\omega_o l^4}{30EI}$
5. Cantilever Beam – Couple moment M at the free end			
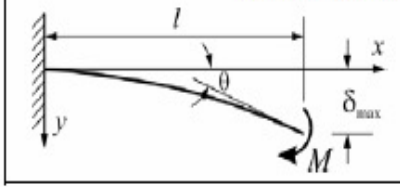	$\theta = \frac{Ml}{EI}$	$y = \frac{Mx^2}{2EI}$	$\delta_{max} = \frac{Ml^2}{2EI}$

Finite Element Solution

1) Find Displacements (deformation)
   - then strain, for structures under load

2) Find load
   - then stress, for structures under given displacement (deformation)

FE Analysis

- Study the theoretical aspects of the problem first, then practice
- Solution is problem dependent
- Solution is not unique, different types of elements and meshes can lead to a good solution
- Convergence achieved by increasing the mesh density but a good solution is not obtained by using large number of elements only (appropriate density distribution)
- Determine how much detail is needed

Divide a Structure to Finite Elements

- Members of structure - natural elements
  eg. Rod, beam elements, in trusses, frames.

- Subjective division -
  Causes approximations in calculations
  Good FEM practice: results converge to exact solution with an increasing in mesh refinement

Finite Element Solution

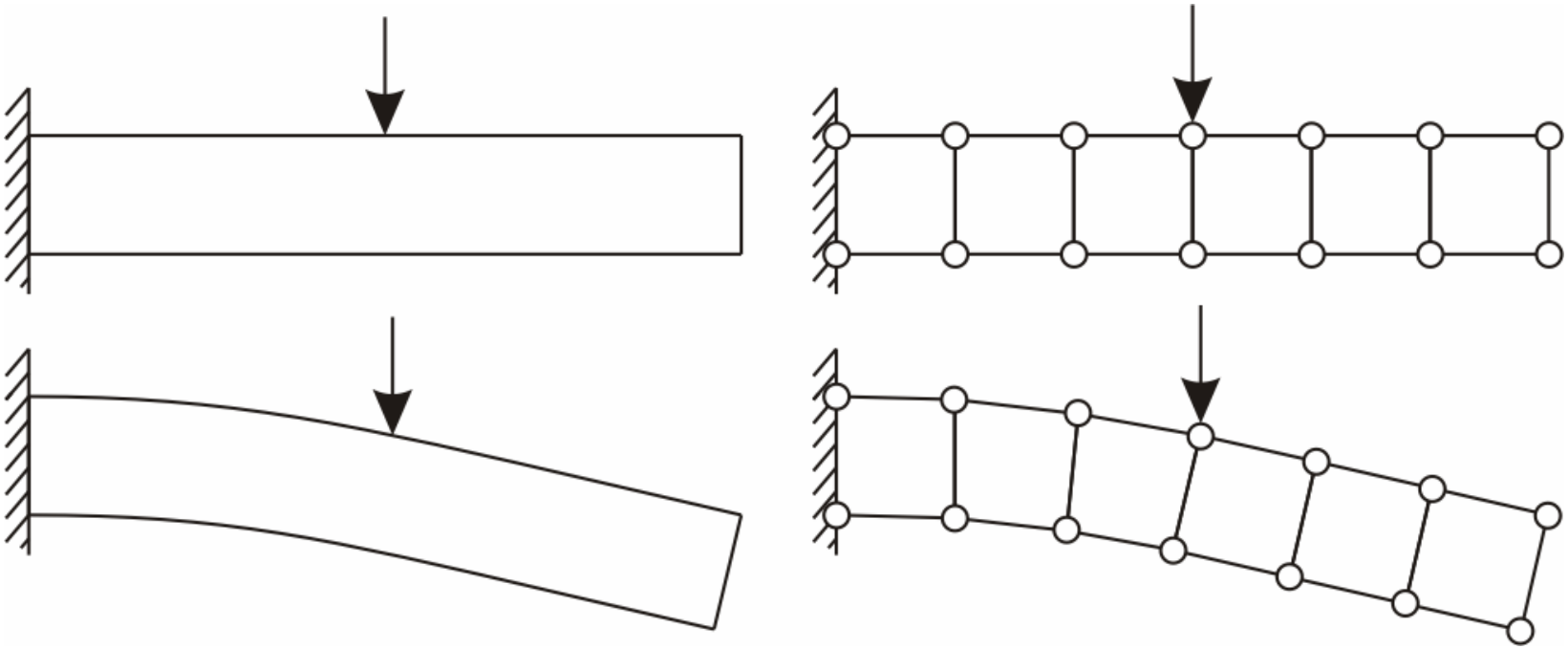

Finite Element Solution

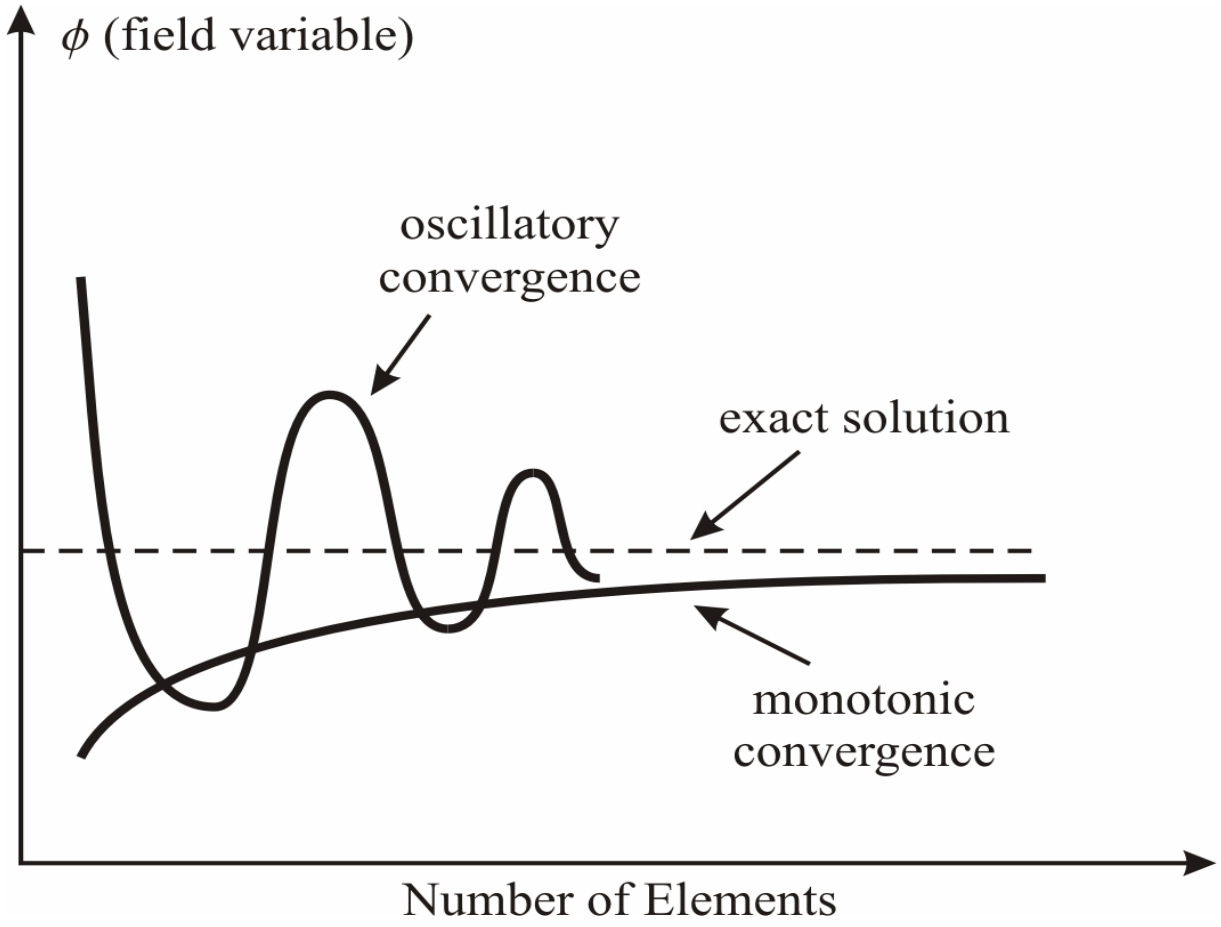

Types of Finite Elements

Rod, beam elements

-for trusses, frame structures

Triangle, rectangular elements

-for flat plates, plan stress, plane strain structures

Curved triangle, curved quadrilateral elements

-for flat plates with curved boundaries

Shell elements

-for shell, thick cylinders

Tetrahedron, curved brick elements

-for solids

Model Generation (meshing 2D)

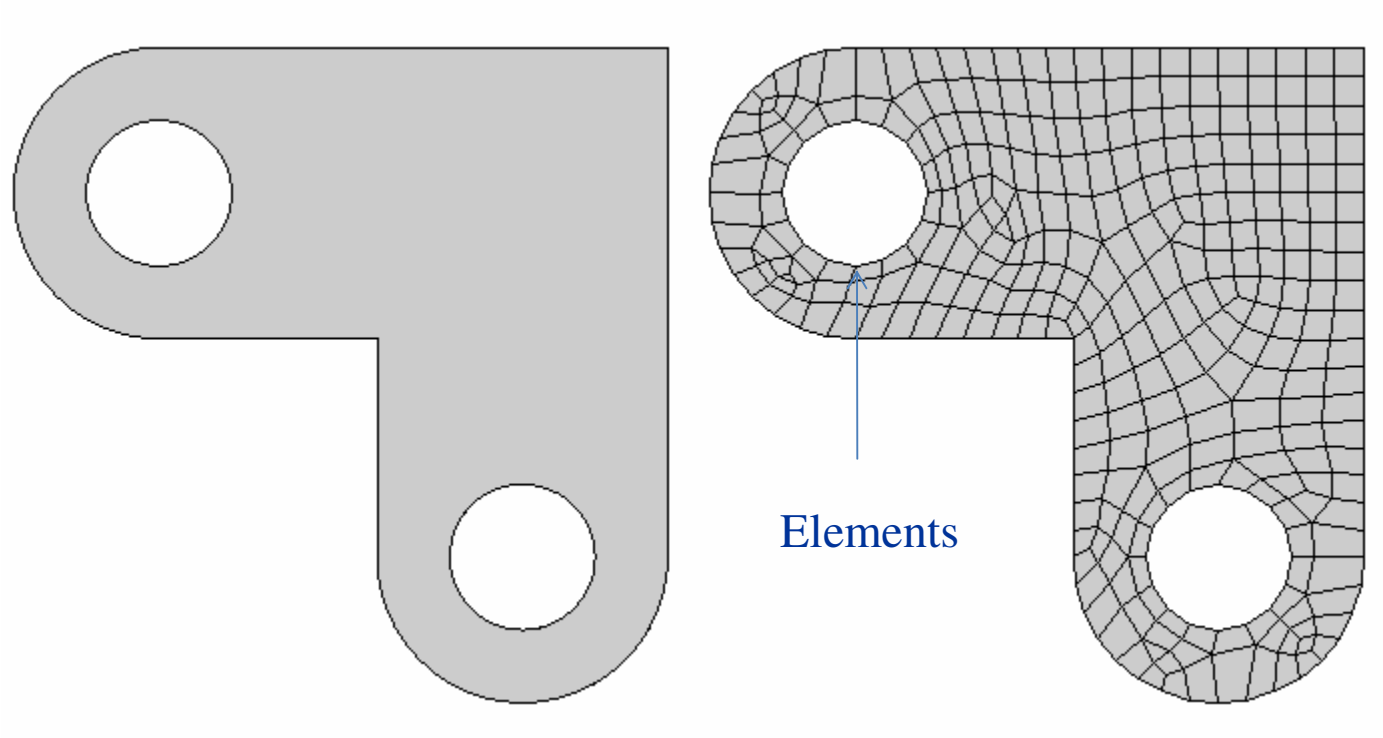

Generate and check a mesh

Model Generation (meshing 3D)

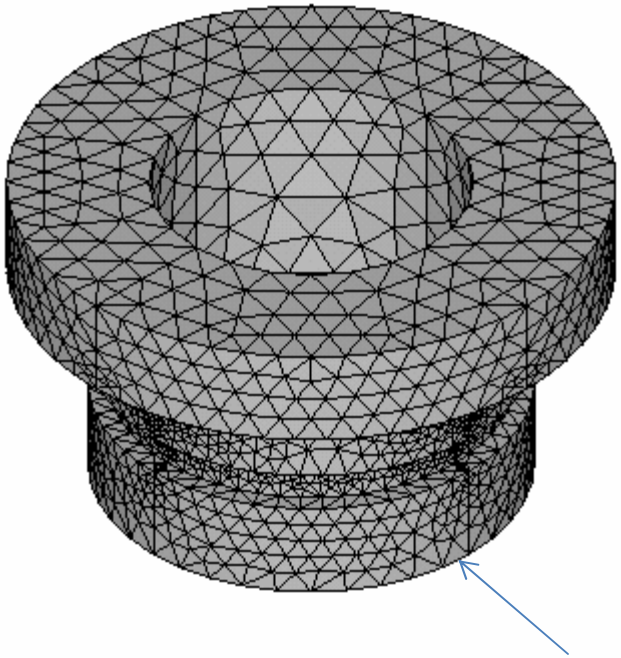

Elements

A volume of solid material, fluid, etc with some specific properties is divided into smaller elements

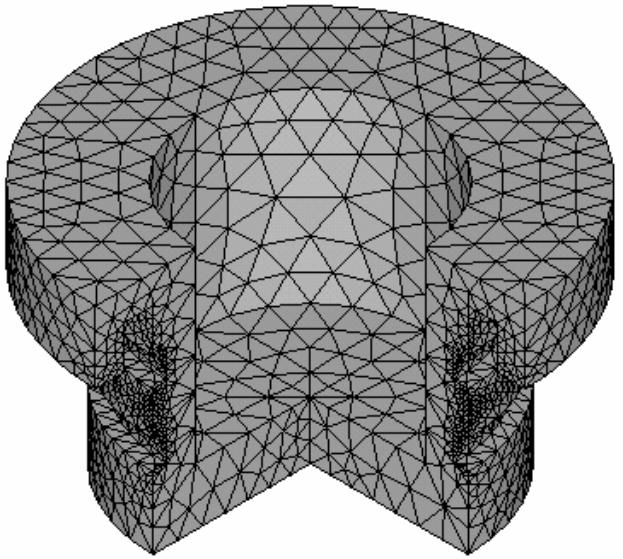

Generate and check a mesh

Elements

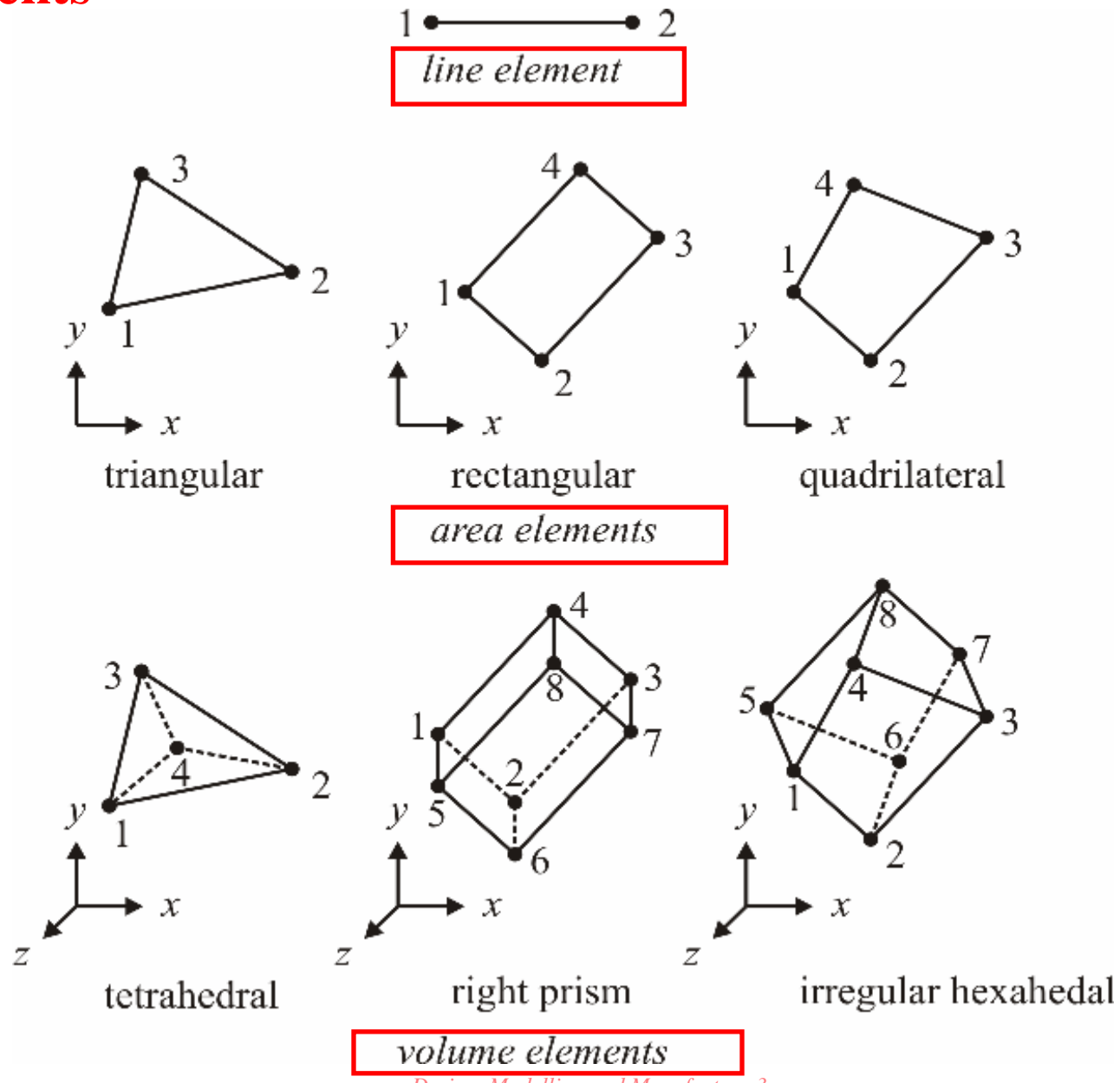
1
2
line element
3
2
1
y
x
triangular
4
3
1
2
y
x
rectangular
4
3
1
2
y
x
quadrilateral
area elements
3
4
2
1
y
x
z
tetrahedral
4
8
3
1
7
2
5
6
y
x
z
right prism
8
7
5
4
3
6
1
2
y
x
z
irregular hexahedal
volume elements

Elements

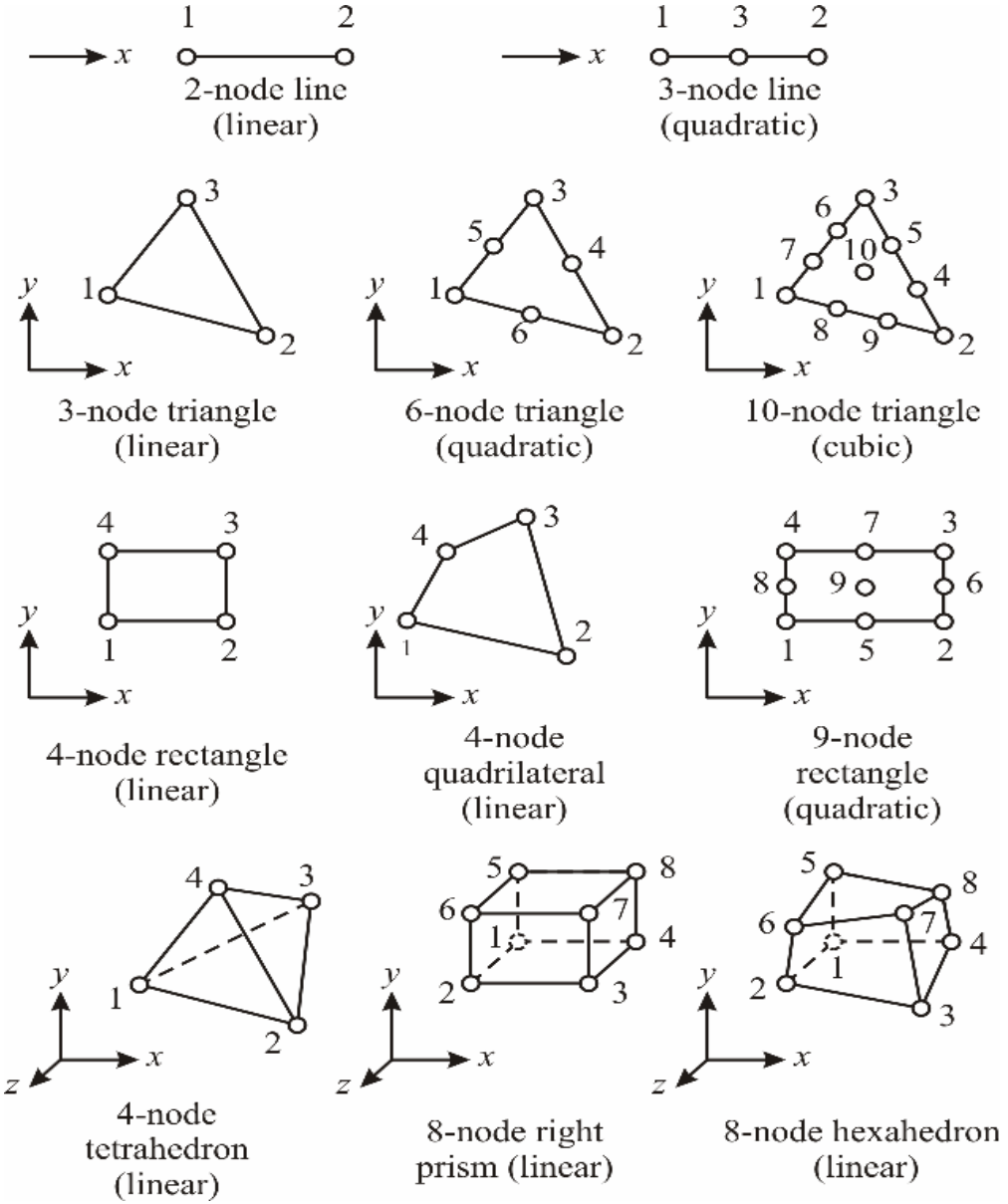
1
2
x
2-node line
(linear)
1
3
2
x
3-node line
(quadratic)
3
y
1
2
x
3-node triangle
(linear)
3
5
4
y
1
6
2
x
6-node triangle
(quadratic)
6
3
7
10
5
y
1
4
8
9
2
x
10-node triangle
(cubic)
4
3
y
1
2
x
4-node rectangle
(linear)
4
3
y
1
2
x
4-node
quadrilateral
(linear)
4
7
3
8
9
6
y
1
5
2
x
9-node
rectangle
(quadratic)
4
3
y
1
2
x
z
4-node
tetrahedron
(linear)
5
8
6
7
1
4
y
2
3
x
z
8-node right
prism (linear)
5
8
6
7
1
4
y
2
3
x
z
8-node hexahedron
(linear)

Nodes

A node is a coordinate location in space where the degrees of freedom (DOFs) are defined.

DOFs

DOFs for this point represent the possible movement of this point due to the loading of the structure.

DOFs also represent which forces and moments are transferred from one element to the next.

Results of an FEA, deflections and stresses, are usually given at the nodes.

Nodes

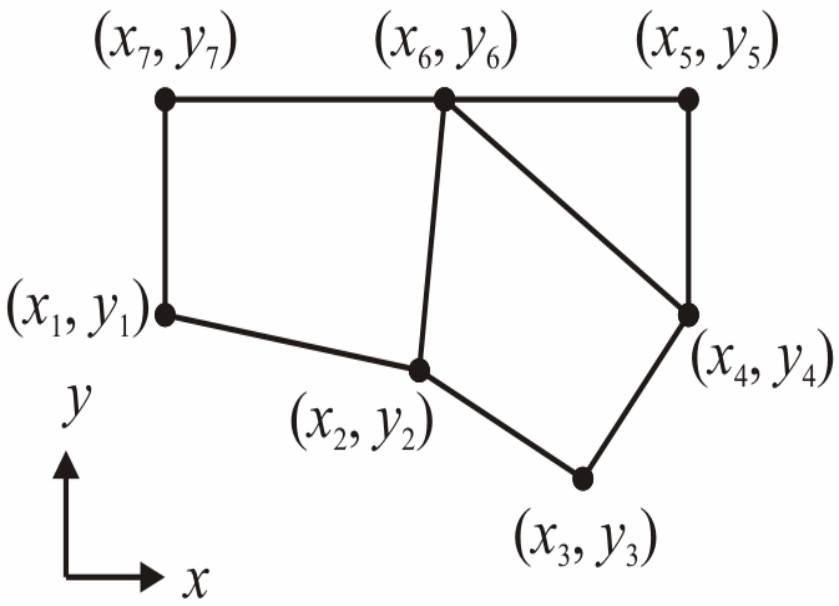

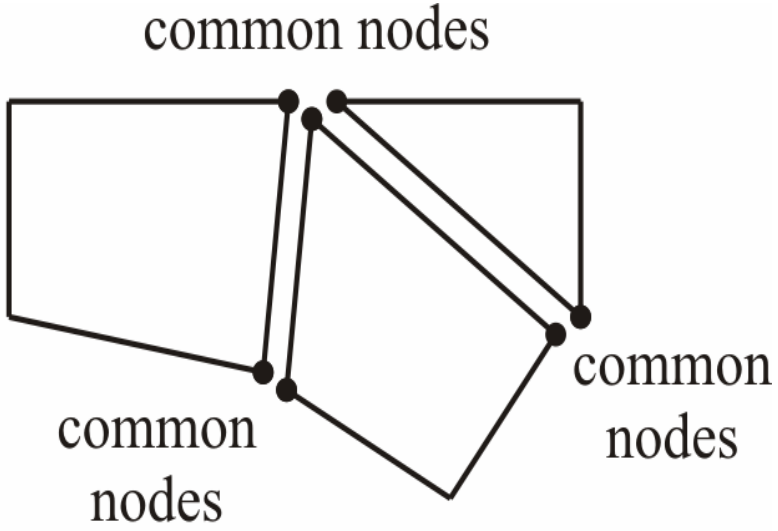

Global system of reference and an element (specific) system of reference

Elements and Nodes

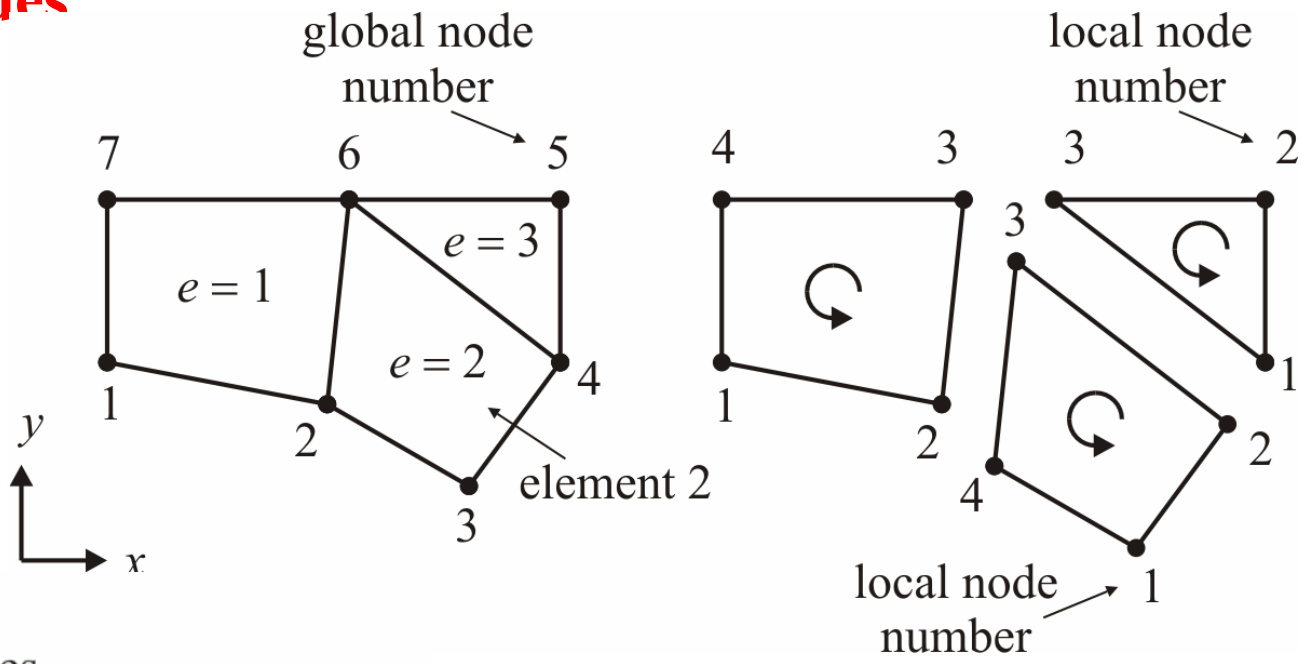

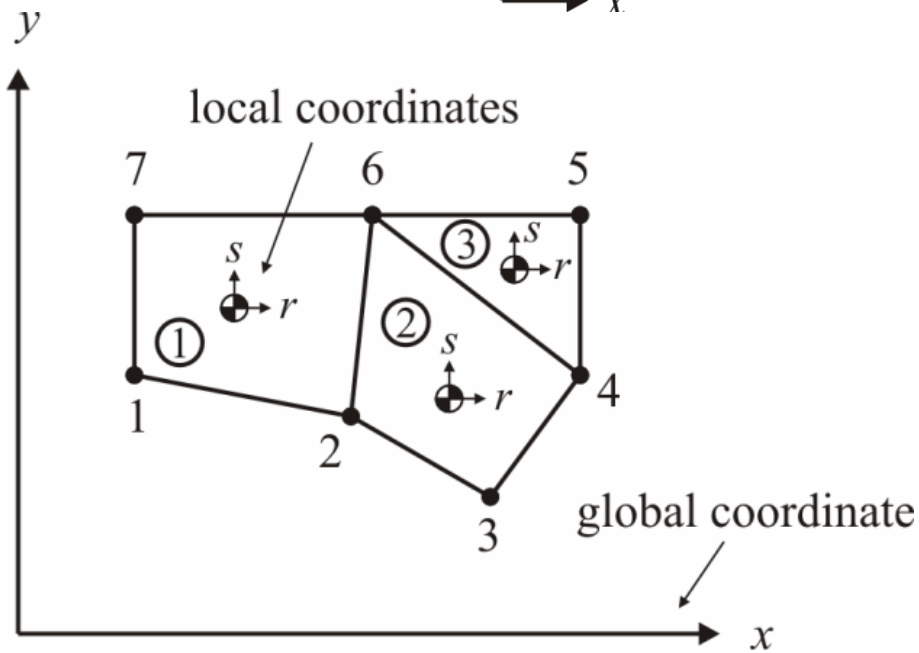

Single Element Structures

- Spring

  According to Hook's law:

$$F = k\,u$$

$$u = \frac{1}{k} F$$

- Rod

$$\Delta l = \frac{l}{AE} F, \quad \text{or} \qquad \frac{\Delta l}{l} = \frac{1}{E}\frac{F}{A}$$

$$\varepsilon = \frac{1}{E}\sigma$$

or

$$\sigma = E\varepsilon$$

ε - strain, σ - stress, E - Young's Modules

Element definition

Linear spring element (truss)

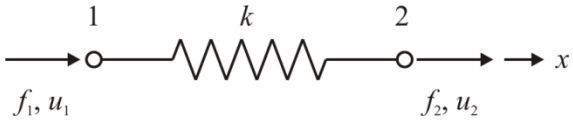

$$u = u_1 - u_2$$

$$f_1 = ku$$

$$f_1 = -f_2$$

$$\begin{bmatrix} k & -k \\ -k & k \end{bmatrix} \begin{Bmatrix} u_1 \\ u_2 \end{Bmatrix} = \begin{Bmatrix} f_1 \\ f_2 \end{Bmatrix} \Leftrightarrow [k^e]\{u^e\} = \{f^e\}$$

Element definition

Linear thermal conductivity

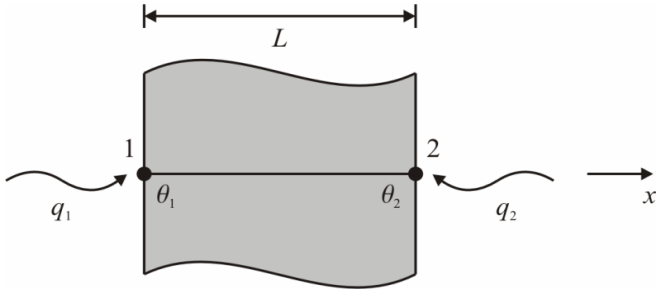

q- heat flux,
k – thermal conductivity

θ temperature

$$q = -kA\frac{d\theta}{dx} \Rightarrow q = -kA\frac{d\theta}{L}$$

$$q_1 = \frac{kA}{L}(\theta_1 - \theta_2)$$

$$q_1 = -q_2$$

$$\frac{kA}{L}\begin{bmatrix} 1 & -1 \\ -1 & 1 \end{bmatrix}\begin{Bmatrix} \theta_1 \\ \theta_2 \end{Bmatrix} = \begin{Bmatrix} q_1 \\ q_2 \end{Bmatrix} \Leftrightarrow \left[k^e\right]\left\{\theta^e\right\} = \left\{q^e\right\}$$

Example of a multiple spring structure

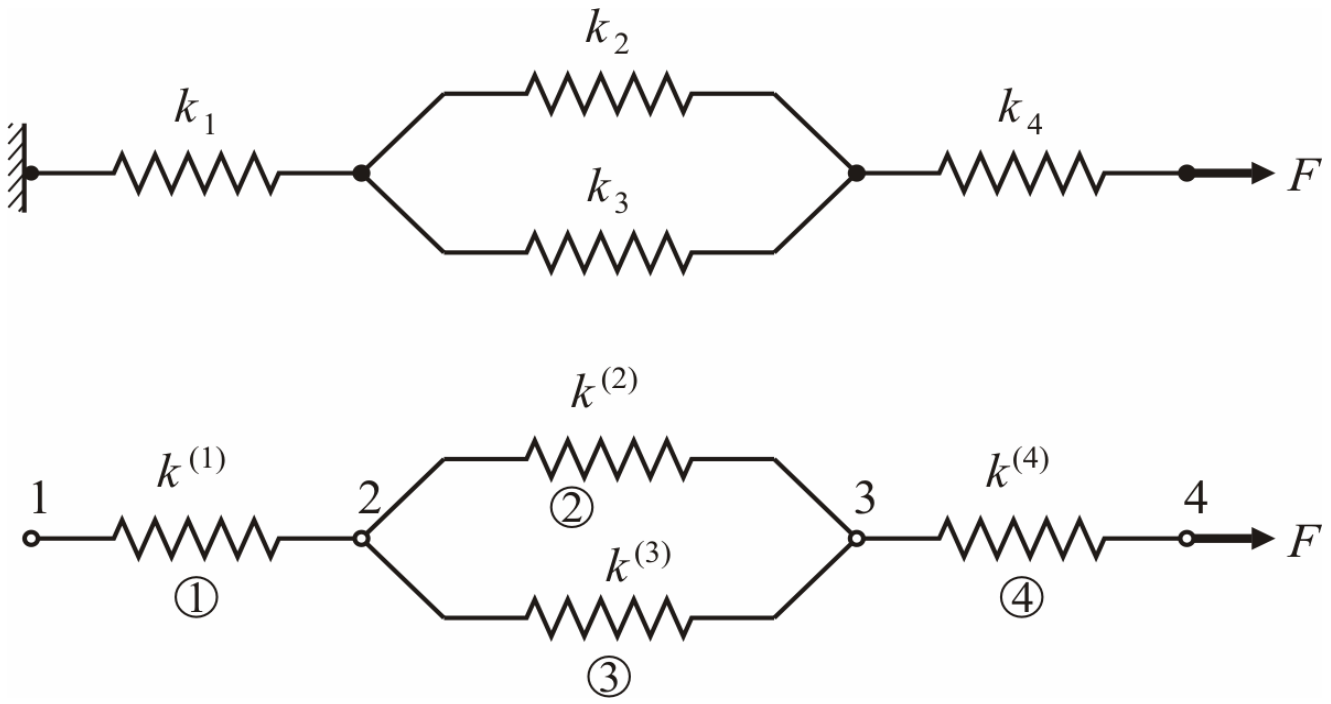

Solution

$$[K^{e}] = k\begin{bmatrix} 1 & -1 \\ -1 & 1 \end{bmatrix}$$

Element stiffness matrix

$$[K^{1}] = k\begin{bmatrix} 1 & -1 & 0 & 0 \\ -1 & 1 & 0 & 0 \\ 0 & 0 & 0 & 0 \\ 0 & 0 & 0 & 0 \end{bmatrix}$$

Expanded stiffness matrices (see the dofs of each element)

$$[K^{2}] = [K^{3}] = k\begin{bmatrix} 0 & 0 & 0 & 0 \\ 0 & 1 & -1 & 0 \\ 0 & -1 & 1 & 0 \\ 0 & 0 & 0 & 0 \end{bmatrix}$$

$$[K^{4}] = k\begin{bmatrix} 0 & 0 & 0 & 0 \\ 0 & 0 & 0 & 0 \\ 0 & 0 & 1 & -1 \\ 0 & 0 & -1 & 1 \end{bmatrix} \Rightarrow [K] = \sum [K^{e}]$$

$$[K] = k\begin{bmatrix} 1 & -1 & 0 & 0 \\ -1 & 3 & -2 & 0 \\ 0 & -2 & 3 & -1 \\ 0 & 0 & -1 & 1 \end{bmatrix}$$

Assembly of the global stiffness matrix

Solution

$$K = k\begin{bmatrix} 1 & -1 & 0 & 0 \\ -1 & 3 & -2 & 0 \\ 0 & -2 & 3 & -1 \\ 0 & 0 & -1 & 1 \end{bmatrix}$$

$$F' = \begin{Bmatrix} f_1 \\ f_2 \\ f_3 \\ f_4 \end{Bmatrix}$$

$$k\begin{bmatrix} 1 & -1 & 0 & 0 \\ -1 & 3 & -2 & 0 \\ 0 & -2 & 3 & -1 \\ 0 & 0 & -1 & 1 \end{bmatrix}\begin{Bmatrix} u_1 = 0 \\ u_2 \\ u_3 \\ u_4 \end{Bmatrix} = \begin{Bmatrix} f_1 \\ f_2 = 0 \\ f_3 = 0 \\ f_4 = F \end{Bmatrix}$$

BC:
block node 1

$$k\begin{bmatrix} 1 & -1 & 0 & 0 \\ -1 & 3 & -2 & 0 \\ 0 & -2 & 3 & -1 \\ 0 & 0 & -1 & 1 \end{bmatrix}\begin{Bmatrix} u_1 = 0 \\ u_2 \\ u_3 \\ u_4 \end{Bmatrix} = \begin{Bmatrix} f_1 \\ f_2 = 0 \\ f_3 = 0 \\ f_4 = F \end{Bmatrix} \Rightarrow u_2 = \frac{F}{k}; u_3 = \frac{3F}{2k}; u_4 = \frac{5F}{2k}$$

Results of the Example

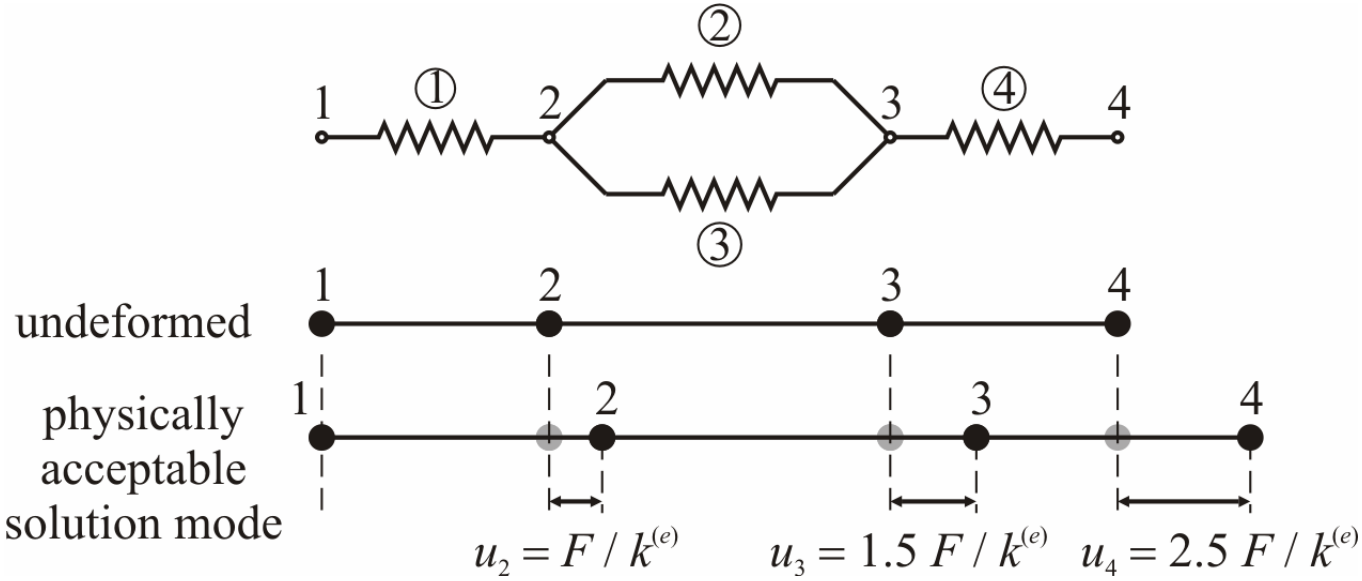

One Dimensional Rod Element with Uniform rod with E, A, L

F_1, F_2 - Nodal forces

u_1, u_2 - Nodal displacements

$$u_1 - u_2 = \frac{l}{AE} F_1$$

$$u_2 - u_1 = \frac{l}{AE} F_2$$

$$F_1 = \frac{AE}{l}(u_1 - u_2)$$

$$F_2 = \frac{AE}{l}(u_2 - u_1)$$

$$\begin{Bmatrix} F_1 \\ F_2 \end{Bmatrix} = \frac{AE}{l}\begin{bmatrix} 1 & -1 \\ -1 & 1 \end{bmatrix}\begin{Bmatrix} u_1 \\ u_2 \end{Bmatrix}$$

Rod elemental stiffness matrix in co-ordinates

$$\left[K^e\right] = \frac{AE}{l}\begin{bmatrix} 1 & -1 \\ -1 & 1 \end{bmatrix}$$